belling

INSIDE EVERY GREAT HOME

USER GUIDE

BELLING 100/110cm ELECTRIC CERAMIC (ALL MODELS)

Table Of Contents

INTRODUCTION 1
SAFETY & WARNING INFORMATION 3
GETTING TO KNOW YOUR PRODUCT 8
OVENS & GRILLS 12
USING THE GRILL 13
USING THE MAIN OVEN 15
CLOCK/PROGRAMMER 20
CLEANING YOUR APPLIANCE 23
APPLIANCE MAINTENANCE 24
FAQ's 26
TECHNICAL DATA 28
ENERGY DATA TABLE 29

INTRODUCTION

This user guide book is designed to help you through each step of owning your new product.

Please read it carefully before you start using your appliance, as we have endeavored to answer as many questions as possible and provide you with as much support as we can.

General information, spares and service information is available from our website.

If you should find something missing from your product or have any questions that are not covered in this user guide, please contact us (see contact information inside the front cover).

For a more detailed explanation of how to use this product, please refer to www.belling.co.uk for the full user manual.

COUNTRIES OF DESTINATION:

GB- Great Britain	✓
IE - Ireland	✓
DE - Germany	
FR - France	
PL - Poland	
NL - Netherlands	
SE - Sweden	
NZ - New Zealand	
AU - Australia	

CONTACT INFORMATION:

Customer Care Helpline:

0344 815 3746

Alternatively, use the contact form on our website

www.belling.co.uk

Details about warranty registration and spares & service information are also available on our website.

Calls are charged at the basic rate, please check with your telephone service provider for exact charges.

Your new appliance comes with our FREE 3 year guarantee (UK only), protecting you against electrical and mechanical breakdown.

To register your new appliance for its warranty (UK only) please visit our website www.belling.co.uk. For full terms & conditions of the manufacturer's guarantee, please refer to the website above.

In addition, you may wish to purchase an extended warranty. Details of how to do this are also on our website www.belling.co.uk.

Our policy is one of constant development and improvement, therefore we cannot guarantee the strict accuracy of all of our illustrations and specifications. Changes may have been made subsequent to publishing.

Glen Dimplex Home Appliances, Stoney Lane, Prescot, Merseyside, L35 2XW

EUROPEAN DIRECTIVES

As a producer and a supplier of cooking appliances we are committed to the protection of the environment and are in the compliance with the WEEE directive.

All our electric products are labelled accordingly with the crossed out wheeled bin symbol. This indicates, for disposal purposes at end of life, that these products must be taken to a recognized collection points, such as local authority sites/local recycling centres.

This appliance Complies with European Community Directives (CE) for household and similar electrical appliances and Gas appliances where applicable.

This appliance conforms to European Directive regarding Eco design requirements for energy-related products. Our policy is one of constant development and improvement, therefore we cannot guarantee the strict accuracy of all of our illustrations and specifications - changes may have been made subsequent to publishing.

DISPOSAL OF PACKAGING MATERIAL	
	The packaging materials used with this appliance can be recycled. Please dispose of the packaging materials in the appropriate container at your local waste disposal facilities.

SAFETY & WARNING INFORMATION

- **Warning**
  This appliance can be used by children aged from 8 years and above and persons with reduced physical, sensory or mental capabilities or lack of experience and knowledge if they have been given supervision or instruction concerning use of the appliance in a safe way and understand the hazard involved. Children shall not play with the appliance. Cleaning and user maintenance shall not be made by children without supervision.

Warning
If the surface is cracked, switch off the appliance to avoid the possibility of electric shock.

Warning
During use the appliance becomes hot. Care should be taken to avoid touching heating elements inside the oven.

Warning
The appliance and its accessible parts become hot during use. Care should be taken to avoid touching heating elements. Children less than 8 years of age shall be kept away unless continuously supervised.

Warning
The oven must be switched off before removing the guard and that, after cleaning, the guard must be replaced in accordance with the instructions.

Warning
A steam cleaner is not to be used on this appliance.

Warning
Metallic objects such as knives, forks, spoons and lids should not be placed on the hob surface since they can get hot.

Any spillage should be removed from the lid before opening and the hob surface should be allowed to cool before closing the lid.

Warning
Ensure the appliance is switched off before replacing the lamp to avoid the possibility of electric shock.

Warning
Unattended cooking on a hob with fat or oil can be dangerous and may result in fire. **NEVER** try to extinguish a fire with water, but switch off the appliance and the cover the flame e.g. with a lid or a fire blanket.

Warning
Danger of fire: do not store items on the cooking surfaces.

Warning
Use only hob guards designed by the manufacturer of the cooking appliance or indicated by the manufacturer of the appliance in the instructions for use as suitable or hob guards incorporate into the appliance. The use of inappropriate guards can cause accidents.

Warning
Never place food, or dishes on the base of the main oven, the element is here, and it will cause overheating.

Warning
The appliance must never be disconnected from the mains supply during use, as this will seriously affect the safety and performance, particularly in relation to surface temperatures becoming hot and gas operated parts not working effectively. The cooling fan (if fitted) is designed to run on after the control knob has been switched off.

Warning
Do not store flammable liquids or items in the vicinity of this appliance.

Warning
Do not modify this appliance.

Warning
Do not operate the appliance without the glass panel correctly fitted.

Warning
Accessible parts may become hot when the grill is in use. Children should be kept away.

Warning
If a lid is fitted to your appliance any spillage should be removed from the lid before opening and the hob surface should be allowed to cool before closing the lid.

Warning
This appliance must be earthed.

CAUTION INFORMATION

Caution
In order to avoid a hazard due to inadvertent resetting of the thermal cut-out, this appliance must not be supplied through an external switching device, such as a timer, or connected to a circuit that is regularly switched on and off by the utility.

Caution
Do not use harsh abrasive cleaners or sharp metal scrapers to clean the oven door glass/ the glass of hinged lids of the hob (as appropriate), since they can scratch the surface, which may result in the shattering of the glass.

Caution
Only use the temperature probe recommended for this oven.

Caution
Do not stare at the hob elements.

Caution
After use, switch off the hob element by its control and do not rely on the pan detector.

Caution
This appliance is not intended to be operated by means of an external timer or separate remote control system.

Caution
The cooking process must be supervised , A short-term cooking process has to be supervised continuously.

Caution
Accessible parts may be hot when the grill and/or the oven are in use. Young children shall be kept away.

Caution
Our policy is one of constant development and improvement, therefore we cannot guarantee the strict accuracy of all our illustrations and specifications. Changes may have been made subsequent to publishing.

Caution

Make sure that you have removed all packaging and wrapping. Some of the items inside this appliance may have additional wrapping. It is advised that you turn the ovens and/or grill on for a short while. This will burn off any residues left from manufacturing. There may be a smell which accompanies this process- but this is nothing to worry about and is harmless. It is recommended that you wash the oven shelves, baking tray, grill pan and grill pan trivet before their first use in hot soapy water. This will remove the protective oil coating.

Caution

This appliance is for cooking purposes only. It must not be used for other purposes, for example room heating.

Caution

Connection should be made with a suitable flexible cable with a minimum temperature of 70°C. Ensure that you route all mains cables well clear of any adjacent heat source.

Caution

We recommend that the appliance is connected by a competent person who is a member of a 'Competent Person Scheme' who will comply with the required regulations.

Caution

The space of air circulation , located underneath and at the back of the hob improves its reliability by ensuring that it will cool down, efficiently.

- Please read the following most carefully:

FIRE SAFETY ADVICE

- If you do have a fire in the kitchen, don't take any risks- get everyone out of your home and call the Fire Brigade.
- **If a pan catches fire:**
  - Do not move it- it is likely to be extremely hot.
  - Turn off the heat if it's safe to do so- but never lean over the pan to reach the controls.
  - If you have a fire blanket, put it out over the pan. If you have put the fire out, leave the pan to cool completely.
- **Deep-fat frying presents more dangers in your kitchen.**
  - Never fill a chip pan (or other deep fat fryer) more than one-third full of oil.
  - Do not use a fire extinguisher on a pan of oil- the force of the extinguisher can spread the fire and create a fireball.

- **If you have an electrical fire in the kitchen:**
  - Pull the plug out, or switch off the power at the fuse box - this may be enough to stop the fire immediately
  - Smother the fire with a fire blanket, or use a dry powder or carbon dioxide extinguisher
  - **Remember:** never use water on an electrical or cooking oil fire.

OTHER SAFETY ADVICE

- **DO**
  - Always take care removing food from the oven as the area around the cavity may be hot.
  - Always use oven gloves when handling any utensils that have been in the oven as they will be hot.
  - Always make sure that the oven shelves are resting in the correct position between two runners.
  - Always use the Minute Minder (if fitted) if you are leaving the oven unattended- this reduces the risk of food burning.

- **DO NOT**
  - Never place items on the door while it is open.
  - Never wrap foil around the oven shelves or allow foil to block the flue.
  - Never drape tea towels near the oven while it is on; this will cause a fire hazard.
  - Never pull heavy items, such as turkeys or large joints of meat, out from the oven shelf, as they may overbalance and fall.
  - Never use this appliance to heat anything other than food items and do not use it for heating the room.

GETTING TO KNOW YOUR PRODUCT

Important

If the clock/ programmer is locked, it must be unlocked before the appliance can be used.

To lock/ unlock the clock/ programmer press and hold the '+' key for 5 seconds.

Your appliance layout may differ depending on the model.

CONTROL PANEL

1	Cook Zones
2	Top Oven/ Grill
3	Bottom left oven
4	Top right oven
5	Main Oven temperature control

HOB

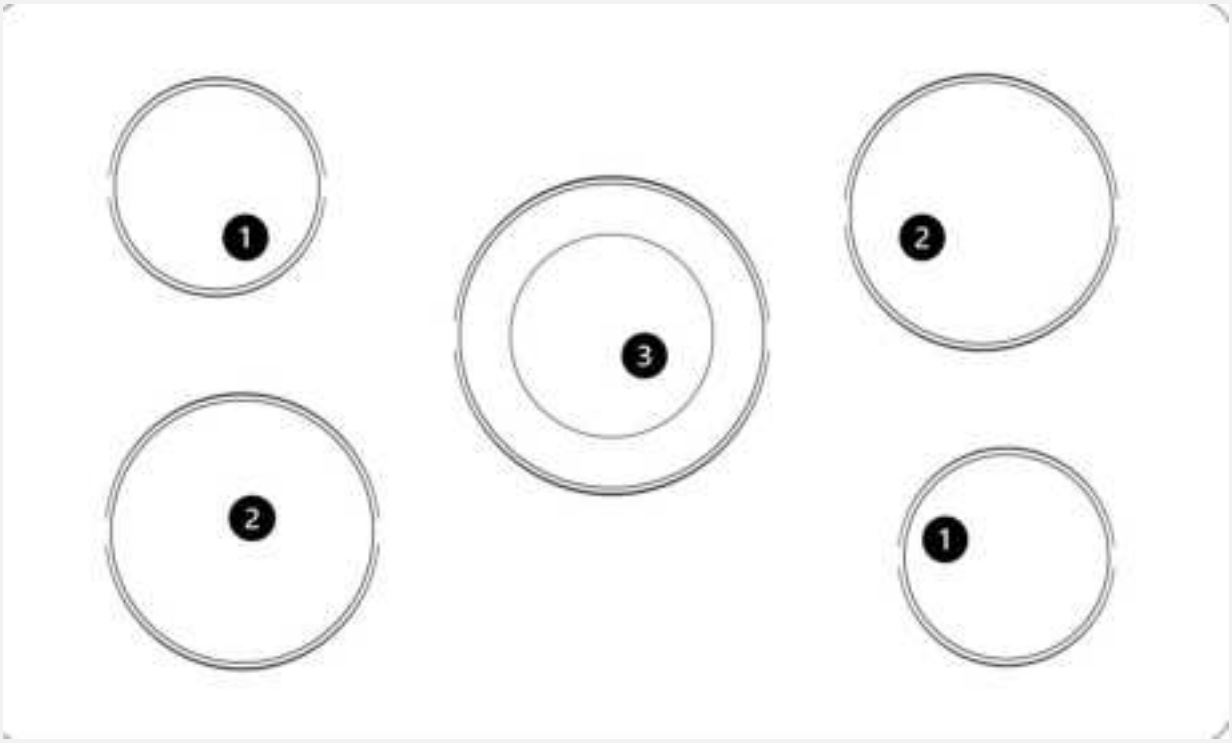

HOB FUNCTIONS		
1	Small	Right hand front Left hand rear
2	Medium	Right hand rear Left hand front
3	Large	Centre

CAVITY OVERVIEW

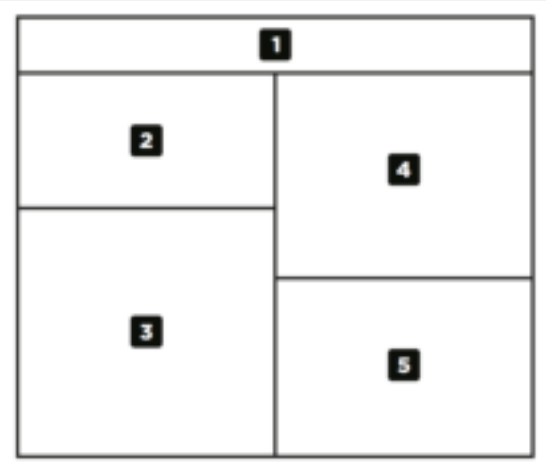

CAVITY OVERVIEW	
1	Fascia
2	Top Grill
3	Conventional Oven
4	Fanned Oven
5	Storage Compartment

COOK ZONE POWER SETTING DIAL

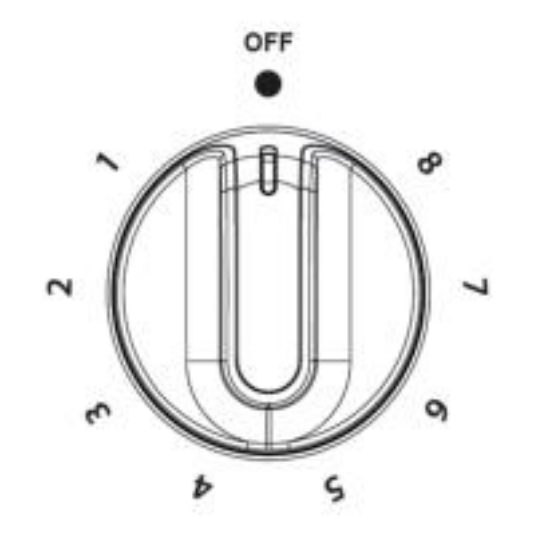

GRILL POWER SETTING DIAL

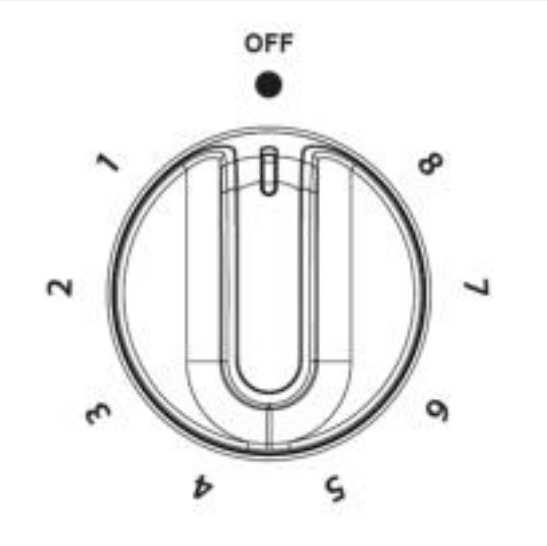

MAIN OVEN DIAL

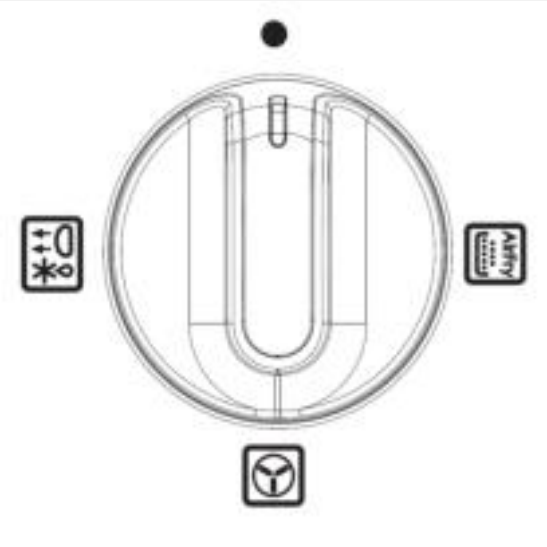

TEMPERATURE CONTROL DIAL

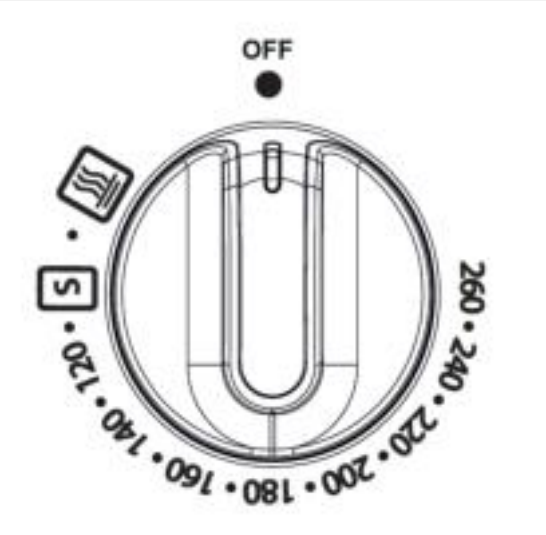

BOTTOM OVEN DIAL

MAIN OVEN FUNCTIONS

Fanned Oven	**MAIN**	
Air Fryer	**MAIN**	
Defrost/ Dough proving	**MAIN**	
Keep Warm	**MAIN**	
Slow Cook	**MAIN**	S

OVENS & GRILLS

OVENS

When using the top oven or main oven, the white thermostat indicator light will come on until the selected temperature is reached.

When the Top oven/grill or grill is switched on, the cooling fans come on to keep the fascia and control knobs cool during cooking/grilling. The cooling fans may operate when the main ovens are in use depending on the temperature setting. The fans may continue to operate for a period after the oven/grill has been switched off. During use the fan may cycle on and off, this is normal.

Important
Never put items directly on top of the base of the oven, or cover the oven base with foil, as this may cause the element to overheat. Always position items on the shelf.

Note
The main oven will not operate if the programmer is set to Auto, see Clock/Programmer section for more information.

Note
The cooling fan may run for around 1 hour after use. This is normal to ensure the exterior parts of the cooker fully cool down and because the oven cavity is very well-insulated to prevent heat escaping during the cooking process. Please do not switch the cooker off at the wall before the cooling fan has stopped completely.

USING THE GRILL

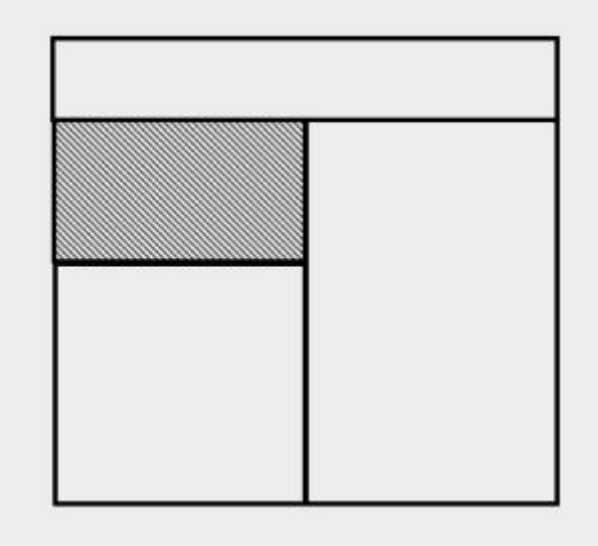

Warning
Never cover the grill pan or grill trivet with aluminium foil, or allow fat to build up in the grill pan, as this creates a fire hazard.

Tip
For best grilling results use shelf position 2 and a 6 minute pre-heat.

Note
The cooling fan may run for around 1 hour after use. This is normal to ensure the exterior parts of the cooker fully cool down and because the oven cavity is very well-insulated to prevent heat escaping during the cooking process. Please do not switch the cooker off at the wall before the cooling fan has stopped completely.

THE COOLING FAN

During use the fan may cycle on and off, this is normal.

When the grill is switched on, the cooking fan comes on to keep the fascia and control knobs cool during grilling. The fan may continue to operate for a period after the grill has been switched off.

USING THE GRILL

Caution
Accessible parts may be hot when the grill is used- young children should be kept away.

Important
The grill door must be fully open when the grill is used.

Tip
For grilling small quantities of food, the centre (economy) grill can be used with the grill trivet inverted. For large quantities of food, the full grill can be used.

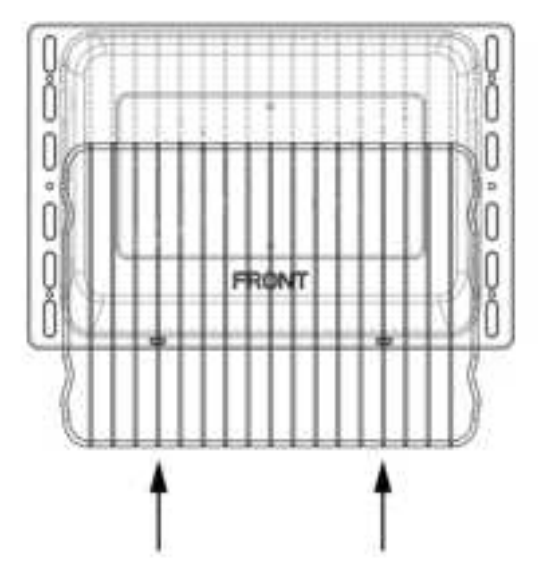

Warning
The door must be open when the grill is used for conventional grilling.

1. Open the grill door. Turn the control knob to the required setting. For best cooking results, we recommend that you preheat the dual grill for 3 minutes and the single grill for 5 minutes.
2. Push the grill pan towards the back of the shelf to position it under the grill.
3. To switch off return the control knob to the off position.

GRILL PAN AND TRIVET

USING THE MAIN OVEN

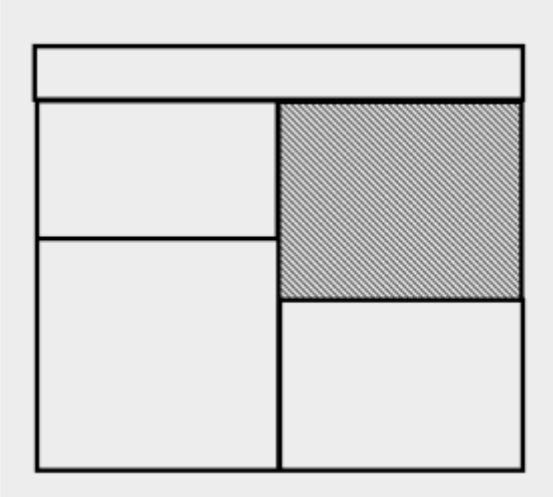

Warning
Accessible parts may be hot when the oven is used. Young children should be kept away.

SETTING A HEATING OPERATION

To start a heating operation, a heating function and a heating temperature must be selected.

Setting a heating function

- Rotate the function control to select the desired heating function.

To modify or cancel the heating function:

- Rotate the function control to select another heating function.
- Rotate the function control to 0 to cancel the heating function.

Setting a heating temperature:

- Rotate the temperature control to select the desired heating temperature. The selected temperature shows in the display.

To modify or cancel the heating temperature:

- Rotate the temperature control to select another heating temperature.
- Rotate the temperature control to 0 to cancel the heating temperature.

COOKING WITH A FANNED OVEN

Caution
As this is a high efficiency oven, you may notice the emission of steam from the oven when the door is opened. Please take care when opening the door.

If you are used to cooking with a conventional oven you will find a number of differences to cooking with a fan oven which will require a different approach.

Tip
Foods are cooked at a lower temperature than a conventional oven, so conventional recipe temperatures may have to be reduced. Please refer to the conversion chart below.

Tip
Preheating is generally not necessary as a fan oven warms up quickly.

Tip
There is no flavour transference in a fan oven, which means you can cook strong smelling foods such as fish at the same time as mild foods- e.g. milk puddings.

Tip
When batch baking foods that will rise during cooking- e.g. bread, always ensure that enough space has been left between the shelves to allow for the rise.

- There are no zones of heat in a fan oven as the convention fan at the back of the oven ensures an even temperature throughout the oven. This makes it ideal for batch baking - e.g. when planning a party as all the items will be cooked within the same length of time.

Note
When 2 or more shelves are being used, it may be necesary to increase the cooking time slightly.

Note
Because the 2 oven shelves are wider than in many ovens, it is possible to cook 2 items per shelf.

Note
When roasting meats, you will notice that fat splashing is reduced, which is due in part to the lower oven temperatures, and will help keep cleaning of the oven to a minimum.

Note
There is no need to interchange dishes onto different shelves part way through cooking, as with a conventional oven.

DEFROSTING AND COOLING IN THE MAIN OVEN

To defrost frozen foods, turn the oven control to the defrost position, place the food in the centre of the oven and close the door.

To cool foods after cooking prior to refridgerating or freezing, turn the main oven control to the defrost position and open the door.

DEFROSTING TIMES

Note
Small or thin pieces of frozen fish or meat- e.g. fish fillets, prawns or mince will take approximately 1-2 hours.

Note
Placing food in a single layer will reduce the thawing time.

Note
A medium sized casserole or stew will take approximately 3-4 hours.

Note
A 1½kg/ 3lb oven ready chicken will take approximately 5 hours, remove the giblets as soon as possible.

Caution
BE SAFE:

Do not defrost stuffed poultry using this method.

Do not defrost larger joints of meat and poultry over 2kg/ 4lb using this method.

USING THE AIRFRY FUNCTION

Simply choose the AirFry setting on the main oven, then place your chips, vegetables or chicken on the specially designed air fryer tray.

The tray allows more air to circulate speeding up cooking time, reducing the need for any extra oils making cooking healthier.

AirFry is great for cooking chips, meat and to prepare meals that you would normally grill.

There's a few things which don't AirFry well including cakes, pastries and breads as they can become dry or tough. Foods in a wet batter also can not be cooked by AirFrying.

1. Select the AirFry function on the main oven and set the temperature to 220°C.
2. Position the metal Airfry tray on the 3rd (centre) shelf position from the bottom. Food should be evenly spaced on the airfry tray in a single layer to allow for even cooking.
3. Place a baking tray on the shelf position below the AirFry tray to catch any crumbs or drips.

Warning
For recipes with 30 minutes or longer cooking time a 5-10 minute pre-heat time is recommended.

Frozen or dense foods may require additional cook time.

Note
If you're using a non-air fryer recipe, make sure you shorten the cooking time as food will cook faster than a conventional oven.

Important

Air Frying in a large oven cavity allows for more food to be airfryed at one time, longer cooking times are to be expected. Please adjust cooking times accordingly.

Important

Greasy foods may cause smoke during the airfry cycle, maintaining a clean oven and using a baking tray below to catch debris is recommended.

Note

It may be necessary to lightly spray the airfry tray with oil to avoid food sticking to it.

MAIN OVEN FUNCTIONS: RECOMMENDED USES		
Fanned Oven		The even temperature in the oven makes this function suitable for batch baking or batch cooking foods.
Air Fryer	AirFry	The rapidly distributed air makes it suitable for oil-free frying.
Defrost/Dough proving		Defrost foods with the oven door closed, or cool dishes prior to refrigeration leave the oven door open. Using with the door closed also makes it suitable for proving bread prior to baking.
Slow Cook	S	The slow cook function will cook gently at 100°C. Perfect for tender meats & nutrition-rich stews.
Keep Warm		Uses gentle heat from the lower element to provide a consistent low temperature. It can be used to keep hot food warm or to warm plates & serving dishes.

OVEN FURNITURE

- Extra shelves may be ordered from your local supplier.

Baking trays and roasting tins:

For best cooked results and even browning, the recommended size baking trays and roasting tins that should be used are as follows;

- Baking tray 350 mm x 250 mm This size of baking tray will hold up to 12 small cakes.
- Roasting tin 370 mm x 320 mm

Position baking trays and roasting tins on the middle of the shelves, and leave one clear shelf-position between shelves, to allow for circulation of heat.

CLOCK/PROGRAMMER

Important

If the clock/programmer is locked, it must be unlocked before the appliance can be used.

To lock/ unlock the clock/ programmer press and hold the '+' key for 5 seconds.

Please be aware that only the main oven is controlled by the programmer.

Note

Your clock/programmer may not have all of these functions.

	Alarm
	Cooking time
	End of Cooking time
	Time Key
Auto	Automatic Mode
Man	Manual Mode
	Adjustment Keys Volume Level & Baking Time
h:min	Units of time (hours: minutes)
88:88	Time Display

USING THE TOUCH CONTROLS

- Left button: minus/decrease
- Middle button: menu to select a function
- Right button: plus/ increase
  - When a function is selected and the time or volume is set, the chosen function will automatically start seven seconds after setting.

SETTING THE VOLUME

- Press the menu button until "LX" (X=1,2 or 3) flashes on the display. Use the plus or minus buttons to select a volume level.

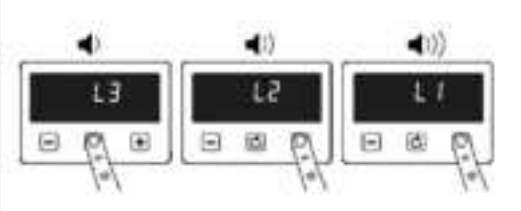

SETTING TIMERS

Note
Timers and alarms can only be set when the main oven control knob is switched to a function mode.

MINUTE MINDER

- Touch the clock icon once and use the plus or minus buttons to set a timer.
  - When the alarm time is reached the alarm icon will flash and the alarm will sound. Touch any key to silence the alarm. The alarm will stop automatically after 5 minutes.
  - If you want to adjust the timer you have set, you can go to the alarm settings again and press the plus or minus keys to adjust it.
  - If you want to cancel the alarm, you can go to the alarm settings again and set the timer to 00:00 (h:min)

SETTING THE COOKING DURATION

- Touch the clock icon twice to activate the cooking time setting
  - Adjust the time display using the plus/ minus icons to set the required time for cooking.
  - If you want to adjust the cooking time that you have set, you can go to the cooking time setting again and press the plus and minus keys to adjust
  - To cancel the cooking time, you can go to the cooking time settings again and set the cooking time to 00:00 (h:min).

SETTING THE COOKING END TIME

- Touch the clock icon three times to set a specific end cooking time.
  - Adjust the time display using the plus/ minus icons to show the desired end time for cooking.
  - When the end cooking time is reached, the oven will automatically turn off, the end cooking time icon will go off, and the alarm will sound automatically stopping after 5 minutes. To stop the alarm press any key.
  - If you don't set an end time of cooking, the oven will only run automatically for 5 hours.

For all the above settings, wait for 5 seconds to automatically save the settings.

When one setting is adjusted and switched to another, the original settings are saved. For example, if the alarm is set and you touch the time button to switch to the clock setting, the alarm setting will still be saved

SETTING THE TIME

Note
The time can only be set when the main oven control knob is in the 0 position or on the light setting.

Double touch the clock icon, then use the plus and minus buttons to adjust.

The clock uses a 24-hour system, that is, 00:00-23:59 (h: min)

The time setting will be automatically saved after 5 seconds of no buttons being touched,

Note

The oven functions will not work until the clock time is set.

MANUAL MODE

If the programmer is not in semi-automatic or full- automatic mode you can use oven functions manually. The manual icon is also on the display.

CLEANING YOUR APPLIANCE

Cleaning: Do's	
	Use warm, soapy water
	Wipe the appliance with a damp cloth • Clean the cloth regularly
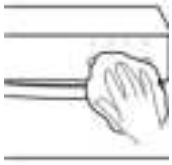	Dry with a soft dry cloth

Cleaning: Don'ts	
	Don't use undiluted bleaches or Chloride products
	Don't use Wire Wool, Abrasive cleaners, Nylon pads or Steam Cleaners
	Do not wash the cast iron griddle or pan supports in the dishwasher

- **Note**
  Always switch off your appliance and allow it to cool down before you clean any part of it.

Note
Please take extra care when cleaning over the symbols on the control panel, as this can lead to them fading.

Note
Tips: Some foods can mark or damage the metal or paint work e.g; Vinegar, fruit juices and salt. Always clean food spillages as soon as possible.

Caution
It is important to clean your appliance regularly as a build up of fat can affect its performance or damage it and may invalidate your guarantee.

Caution
In addition to the above, do not use metal scrapers to clean the oven door glass.

APPLIANCE MAINTENANCE

CHANGING THE LIGHTBULB

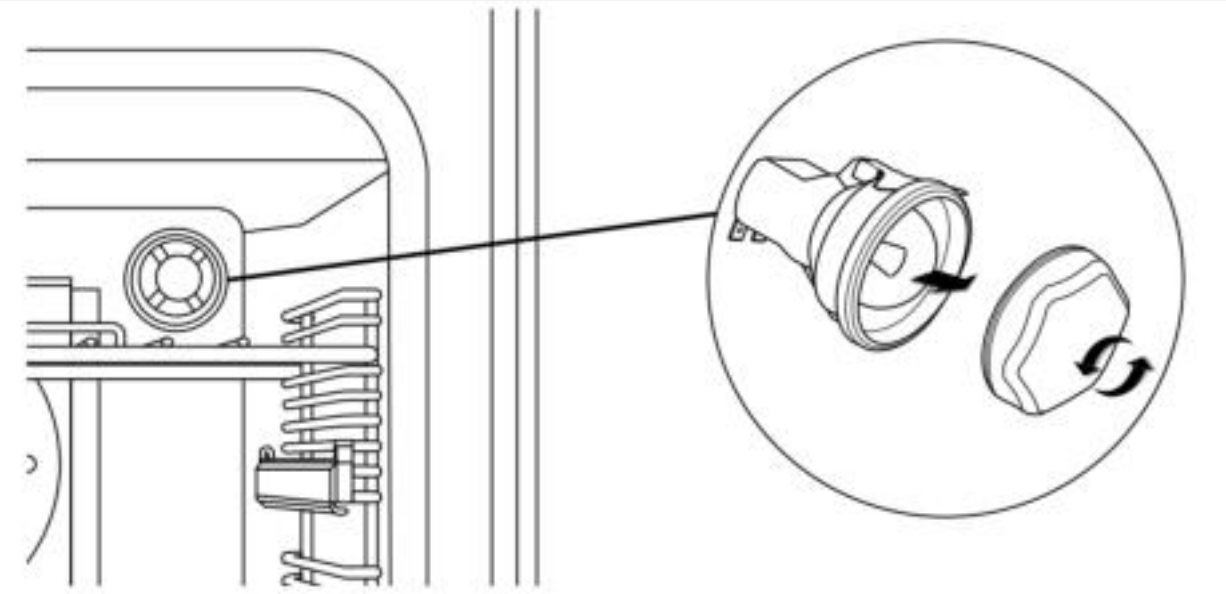

1. Remove the oven shelves.
2. Unscrew the lens cover by turning anticlockwise.
3. Remove the bulb and replace.
4. Replace the lens cover and put the oven shelves back.

- **Warning**
  Switch off the power before you change the light bulb.

- **Note**
  Not all appliances have the same number and type of bulbs. Before you replace your bulb, check to see what type you have. Please remember that bulbs are not covered by your warranty.

REMOVING SHELF RUNNERS

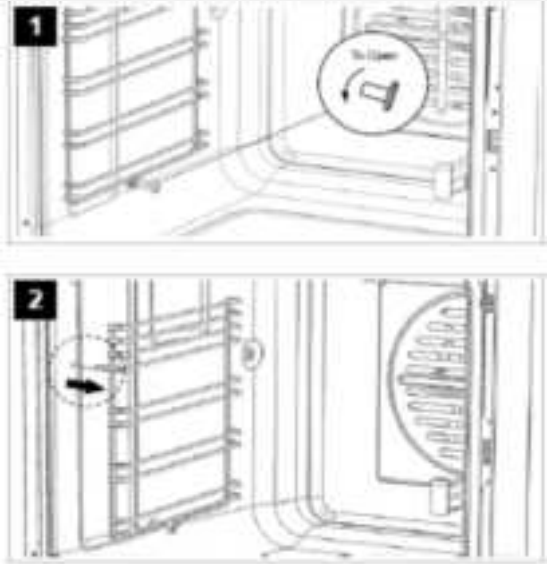

Remove holding screws as per diagrams

STANDARD SHELVES

1. Before removing the shelves completely, please make sure that the shelf is unclipped from the retaining tabs. Slightly raise the shelf and insert in the chosen shelf position

2. **Ensure the shelf is fully pushed back towards the back of the oven, until the shelf stopper is reached.**

FAQ's

Here are some frequently asked questions about your new appliance:

Q: Can I remove the inner glass on the doors for cleaning?

A: The inner glass panels are removable for cleaning, however this does involve removing the door from the cooker and the screws from the retaining strip along the top of the door first. For routine cleaning we recommend leaving the glass panels in situ.

Q: When cleaning, I found a small hole in the top of the main oven cavity, is this meant to be there?

A: This is normal. This is a vent which allows excess steam and pressure to vent out of the rear of the appliance during cooking.

Q: What parts of the appliance can be washed in the dishwasher?

A: Any enamel parts such as the grill pan can be cleaned in a dishwasher, as can oven shelves and shelf guides.

Cast iron items, burner skirts, caps and control knobs must NOT be cleaned in the dishwasher. Instead they should be cleaned with hot soapy water and a nylon brush once they are cool enough.

Q: There's been a power failure and the product won't work- what should I do?

A: Switch off the electricity supply.

When the power returns switch the electricity supply back on and re-set the programmmer/ clock to the correct time of day.

Q: Why is there some warm air coming out of the sides of the doors?

A: This is normal. Excess heat, steam and pressure from the oven cavities is released via a new flue system into the cooling fan chamber. The doors have some side vents which allows a small amount of this heat to be expelled at the door sides to ensure that the door surfaces keep cool. The majority of the excess heat, steam and pressure rises upwards into the cooling fan chamber.

Q: Why does the cooling fan not come on immediately when I turn the grill or oven on?

A: The cooling fan is controlled by a thermal switch and so will only come on once a certain temperature is reached. This is normal. It is also normal for the cooling fan to cycle on and off during use, and for it to stay on a while after cooking.

Q: The cooling fan seems to run for a long time after I have finished cooking, is this normal?

A: This is normal, the ovens are very well insulated to keep more heat in during cooking for better cooking results with less wasted energy. After cooking, the cooling fan helps the appliance cool down to a low temperature of around 35°C, this helps to keep the exterior parts of the cooker cooler for additional safety. The cooling fan may run for around 1 hour after cooking has finished, and this is normal. Don't worry, the cooling fan does not use much electricity (approx. one-third of a unit of electricity per hour). Please do not switch the cooker off at the wall before the cooling fan has stopped completely

Q: How do I attach the grill pan handle to the grill pan?

A: Please ensure that the grill pan is the right way around, with the sloping lip at the front. Attach the grill pan handle making sure the prongs are at the top and the wider support piece sits underneath the grill pan.

Q: Why can I not remove the shelves completely for cleaning?

A: The shelves have 'anti-tip notches' which prevent the shelves being accidentally pulled out completely while cooking, to help prevent accidents. To remove the shelves fully for cleaning, pull the shelf out, then lift upwards at the front.

Q: Why is the main oven not working?

A: Please ensure that the time of day has been set on the timer, and that the word 'Man' (manual mode) is displayed underneath the time of day.

Some models have more than one function in the main oven, on these appliances you must select a temperature with the temperature control knob and a function with the function selector knob for the main oven to work.

Q: The timer touch controls are not responding, why is this?

A: The child-lock may have been activated; this is indicated by a padlock symbol in the top-right hand corner of the screen. Press and hold the plus key for a good 5 to 10 seconds- the padlock symbol will flash initially and them go out completely. The child-lock is then de-activated and the timer can be used as normal.

Q: How do I re-set the timer volume?

A: Please press the middle menu key on the programmer/ timer until 'L1', 'L2' or 'L3' appears on the display. Use the plus and/or minus keys to adjust the volume level, with 'L3' being the loudest level.

TECHNICAL DATA

Warning
This cooker must be earthed.

Data badge	Lower part of the front frame
Appliance class	Class 1 - freestanding cooker
Electrical supply	230 - 400V ~3N ~ 50 Hz
Load	15330W
Standard Oven Light	25W

Hob Top Hotplate	Electrical Supply	Zone Load (W)
Electric	230V	Left hand front 1800W
		Left hand rear 1200W
		Right hand front 1200W
		Right hand rear 1800W
		Centre 2200W
		Warming Zone 110W

Appliance Electrical Supply	Oven Cavity & Function Load (W)
230V	Right hand main oven: Fanned- Air Fry 3166W
	Left hand main oven: Conventional Oven 2229W
	Top Cavity: Single Grill 1561W

ENERGY DATA TABLE

Regulation (EU) 65/2014:

Product Name: Belling 100/110cm Electric Ceramic (All Models)	
Brand:	Belling
Size:	100cm or 110cm
Number of cavities	2

Energy Efficiency

Hob			
Fuel Type	Ceramic		
Number of cook zones	5 Electric Zones		
	Symbol	Value	
Energy Efficiency per cook zone		Cook zone	
	Electric Zone	Zone 1: 14cm 193.2 Wh/kg	
		Zone 2: 18cm 194Wh/kg	
		Zone 3: 21cm 193.7 Wh/kg	
		Zone 4: 18cm 194Wh/kg	
		Zone 5: 14cm 193.2 Wh/kg	
	Electric Zone	All EC Electric hobs 193.62 Wh/kg	

Energy Efficiency

Cavity	Cavity 1	Cavity 2	Cavity 3 (if applicable)
Energy efficiency index	91,5	92,5	
Energy efficiency class	A	A	
Energy Consumption per cycle (conventional mode)	0,75 kWh	0,01 kWh	
Energy Consumption per cycle (fan-forced convection mode)	0,01 kWh	0,74 kWh	
Heat Source	Electric	Electric	
Volume	64 Litres	60 Litres	
Energy consumption measured in accordance with BS EN 60350-1			

This page is intentionally left blank.

This page is intentionally left blank.

This page is intentionally left blank.

Glen Dimplex Home Appliances, Stoney Lane, Prescot,
Merseyside, L35 2XW

0344 815 3746

www.belling.co.uk

GDHA Part Number: 094114000