Since 1968

COMMAX
SmartHome & Security

User Manual

DOOR STATION DRC-nUC

www.commax.com

COMMAX Co.,Ltd.

- Thank you for purchasing COMMAX products.
- Please carefully read this User's Guide (in particular, precautions for safety) before using a product and follow instructions to use a product exactly.
- The company is not responsible for any safety accidents caused by abnormal operation of the product.

Contents

1. Introduction.....2

2. Important Safeguard.....3

3. Overview.....4

4. How to use 6

5. Wiring 7

6. Part List 13

7. Installation 14

8. Specification 15

1. Introduction

Your unit is designed so it can be flush mounted on the or used. When flush mounted on the wall, the stand permils you to the unit for an gular of unit view. The model number is located on the bottom and record the serial number in the space provided below(available). Refer to these numbers whenever you call upon your COMMAX dealer regarding this product.

Model No. Serial No.

To prevent fire or shock hazard, do not expose the unit to rain or moisture.

This symbol is intended to alert the use to the presence of uninsulated **"dangerous Voltage"** within the product' s enclose that may be of sufficient magnitude to constitute a risk of electric shock to persons.

This symbol is intended to alert the use to the presence of important operating and maintemance(servicing) instructions in the literature accompanying the appliance

caution

Risk of electric shock
do not open

CAUTION : To reduce the risk of electric shock, do not remove cover(or back) no user-serviceable part inside refer servicing to qualified service personnel

2. Important Safeguard

▲ **Damage Requiring Service**: This equipment from the power source and source and refer servicing to qualified service personnel under the following conditions:

ⓐ when the power is damaged.
ⓑ if liquid has been spilled or objects have fallen into the unit
ⓒ if the equipment has been exposed to rain or water.
ⓓ if the equipment has been dropped or otherwise damaged.
ⓔ when the equipment exhibits a distinct change in performance- this indicates a need for service.

▲ **Water and Moisture**: Do not use this product near water, for example, near a bath tub, wash bowl, kitchen sink, or laundry tub, in a wet basement, or near a swimming pool, and the like.

▲ **Accessories**: The product may fall, causing serious injury to a child or adult, and serious damage to the appliance. Any mounting of the manufacture' s instructions, and should use a mounting accessory recommended by the manufacturer.

▲ **Object and Liquid Entry**: Never push objects of any kind into this product through openings as they may touch dangerous voltage points or short-out parts that could result in a fire or electric shock. Never spill liquid of any kind on the product.

▲ **Lightning**: For added protection for this product before a lightning storm, or when it is left un attached and un used for long periods of time, unplug it from the wall outlt and disconnect the other system. This will prevent damage to the product due to lightning and power-line surges. If you live in an area heavily prone to lightning storms, it is recommended that you invest in power-line, telephone-line, RFcable and actuator/ polarization surge protectors to protect your appliance system from possible damage

3. Overview

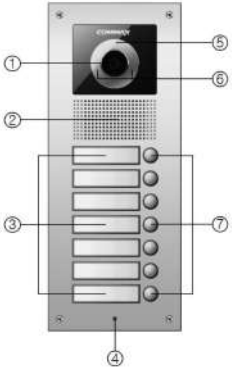

No.	FUNCTIONS	No.	FUNCTIONS
1	CAMERA	5	LIGHTNING SENSOR
2	SPEAKER	6	LIGHT(WHITE LED)
3	NAME CARD	7	CALL BUTTON
4	MIC		

Notice

1. DRC-nUC is a Master unit which has functions to call or communicate with a house unit.
2. “ n “ stands for the No. of house that DRC-nUC can call.

✻ DRC-nUC : DRC-2UC / 3UC / 4UC / 5UC / 6UC / 7UC are available.

4. How to use

FEATURES AND CAUTIONS

1. The power supply of this product is DC12V(Including LED lamp of name label etc.)
2. If user answer the household phone when you call from the door camera(entrance), you can talk.
3. Please note that it makes call other household phone you don’t want if you press other call button mistakenly.
4. Please note that 3-way communication is possible when another user turn on the monitor when you are talking with door camera user on household video phone.

5. Wiring

(1) DRC-2UC

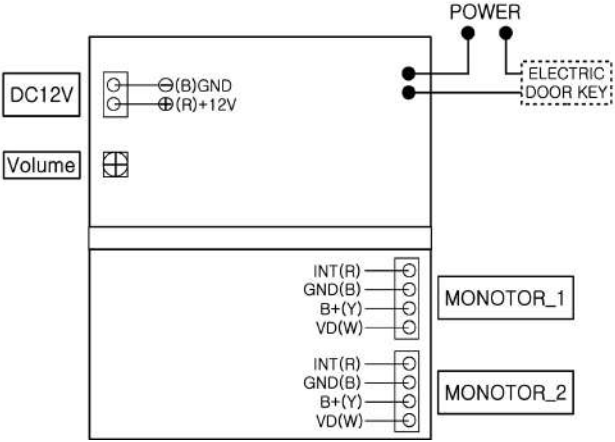

(2) DRC-3UC

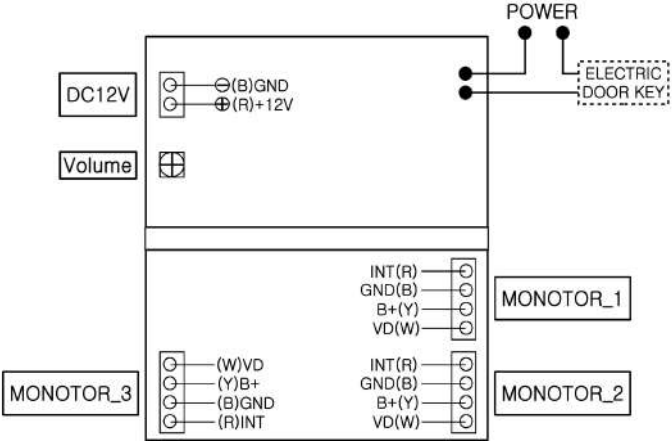
POWER
ELECTRIC DOOR KEY
DC12V
⊖(B)GND
⊕(R)+12V
Volume
INT(R)
GND(B)
B+(Y)
VD(W)
MONOTOR_1
(W)VD
(Y)B+
(B)GND
(R)INT
MONOTOR_3
INT(R)
GND(B)
B+(Y)
VD(W)
MONOTOR_2

COMMAX

COMMAX Co.,Ltd.

513-11, Sangdaewon-dong, Jungwon-gu, Seongnam-si, Gyeonggi-do, Korea
Int'l Business Dept. : Tel.; +82-31-7393-540~550 Fax.; +82-31-745-2133
Web site : www.commax.com

PM10NUC00010

Printed In Korea / 2012.09.105

(3) DRC-4UC

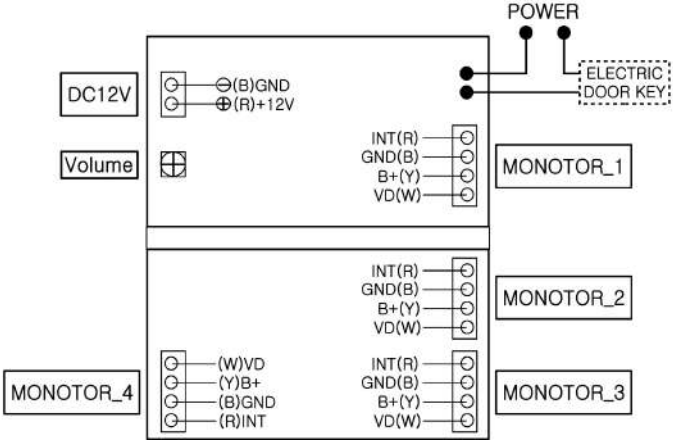
POWER
ELECTRIC DOOR KEY
DC12V
(B)GND
(R)+12V
Volume
INT(R)
GND(B)
B+(Y)
VD(W)
MONOTOR_1
INT(R)
GND(B)
B+(Y)
VD(W)
MONOTOR_2
MONOTOR_4
(W)VD
(Y)B+
(B)GND
(R)INT
INT(R)
GND(B)
B+(Y)
VD(W)
MONOTOR_3

(4) DRC-5UC

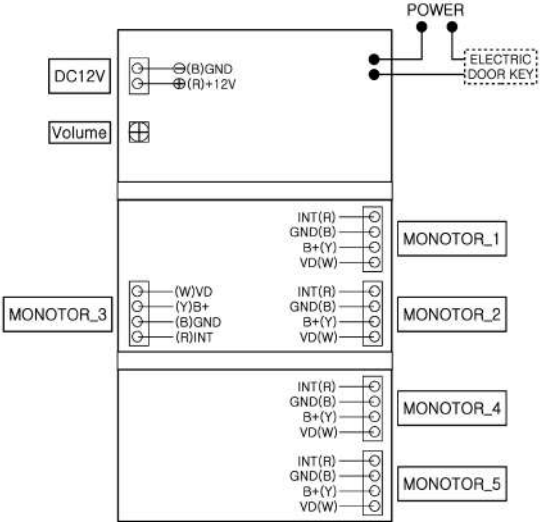
POWER
ELECTRIC DOOR KEY
DC12V
⊖(B)GND
⊕(R)+12V
Volume
INT(R)
GND(B)
B+(Y)
VD(W)
MONOTOR_1
MONOTOR_3
(W)VD
(Y)B+
(B)GND
(R)INT
INT(R)
GND(B)
B+(Y)
VD(W)
MONOTOR_2
INT(R)
GND(B)
B+(Y)
VD(W)
MONOTOR_4
INT(R)
GND(B)
B+(Y)
VD(W)
MONOTOR_5

(5) DRC-6UC

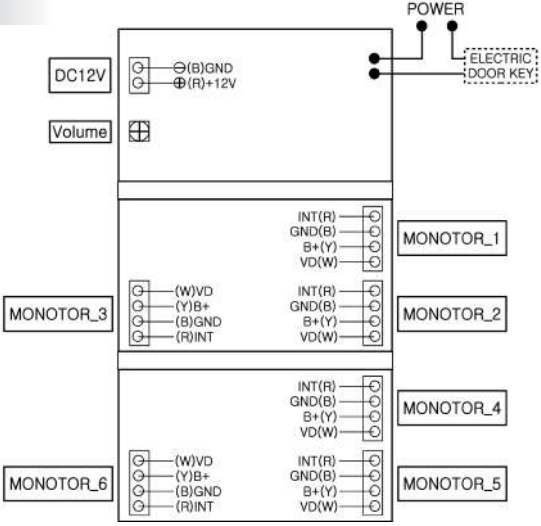
POWER
ELECTRIC DOOR KEY
DC12V
⊖(B)GND
⊕(R)+12V
Volume
INT(R)
GND(B)
B+(Y)
VD(W)
MONOTOR_1
(W)VD
(Y)B+
(B)GND
(R)INT
MONOTOR_3
INT(R)
GND(B)
B+(Y)
VD(W)
MONOTOR_2
INT(R)
GND(B)
B+(Y)
VD(W)
MONOTOR_4
(W)VD
(Y)B+
(B)GND
(R)INT
MONOTOR_6
INT(R)
GND(B)
B+(Y)
VD(W)
MONOTOR_5

(6) DRC-7UC

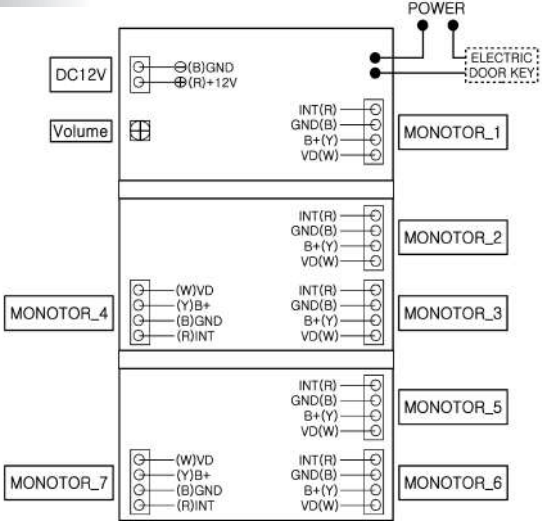
POWER
ELECTRIC DOOR KEY
DC12V
⊖(B)GND
⊕(R)+12V
Volume
INT(R)
GND(B)
B+(Y)
VD(W)
MONOTOR_1
MONOTOR_2
MONOTOR_3
MONOTOR_4
(W)VD
(Y)B+
(B)GND
(R)INT
MONOTOR_5
MONOTOR_6
MONOTOR_7

6. Part List

DRC-nUC

MANUAL

SCREW 4*40
4(EA)

DRC-2UC	4P * 2(EA)
DRC-3UC	4P * 3(EA)
DRC-4UC	4P * 4(EA)
DRC-5UC	4P * 5(EA)
DRC-6UC	4P * 6(EA)
DRC-7UC	4P * 7(EA)

7. Installation

1) Fix the back box onto the wall (BOTTOM CASE). [FIG-1]
2) Fix the top case onto the back box (BOTTOM CASE)with screws [FIG-1]
3) Please refer to the below images regarding the installation position of the product [FIG-2]

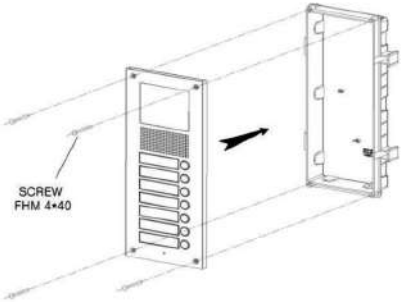

[FIG-1]

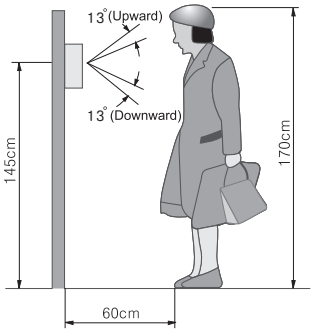

[FIG-2]

8. Specification

Model	DRC-nUC	
Voltage	12V ⎓	
Power Consumption	500mA (MAX)	
Wiring	4WIRES (POLARITY)	
Communication	DUPLEX	
Min. Lux.	0.1Lux(UP TO 300mm FROM THE CAMERA)	
Light	WHITE LED(3pie) 2EA BUILT-IN	
Camera Angle	HORIZONTAL 85°, VERTICAL 63°	
Angle	UP 13° , DOWN 13°	
Camera Module	C-MOS	
Temperature	-10°C ~ +50°C	
Dimension(mm)	DRC-5UC / 6UC / 7UC	142(W) X 315(H) X 50(D)
	DRC-2UC / 3UC / 4UC	142(W) X 250(H) X 50(D)

MEMO