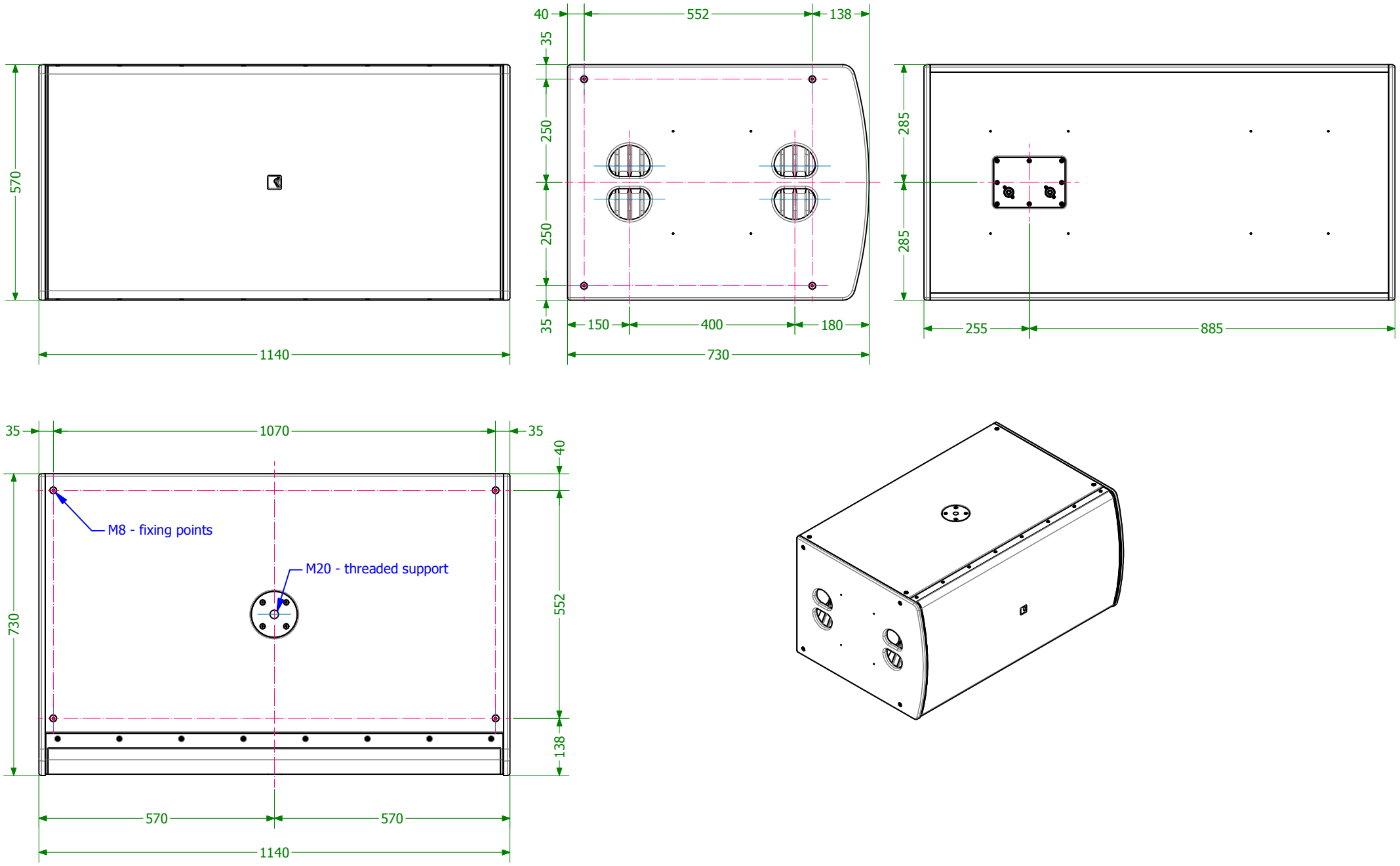EIDOS 218S OVERALL DIMENSIONS