User Manual

1.5KW/3KW/5KW
SOLAR INVERTER / CHARGER

Version: 1.2

Table Of Contents

ABOUT THIS MANUAL 1

Purpose 1
Scope 1

SAFETY INSTRUCTIONS 1

INTRODUCTION 2

Features 2
Basic System Architecture 2
Product Overview 3

INSTALLATION 4

Unpacking and Inspection 4
Preparation 4
Mounting the Unit 4
Battery Connection 5
AC Input/Output Connection 7
PV Connection 8
Final Assembly 9
Remote Display Panel Installation 10
Communication Connection 11
Dry Contact Signal 12

OPERATION 13

Power ON/OFF 13
Operation and Display Panel 13
LCD Display Icons 14
LCD Setting 16
Display Setting 30
Operating Mode Description 35
Battery Equalization Description 37
Fault Reference Code 39
Warning Indicator 39

SPECIFICATIONS 40

Table 1 Line Mode Specifications 40
Table 2 Inverter Mode Specifications 41
Table 3 Charge Mode Specifications 42
Table 4 General Specifications 42

TROUBLE SHOOTING 43

Appendix: Approximate Back-up Time Table 44

ABOUT THIS MANUAL

Purpose

This manual describes the assembly, installation, operation and troubleshooting of this unit. Please read this manual carefully before installations and operations. Keep this manual for future reference.

Scope

This manual provides safety and installation guidelines as well as information on tools and wiring.

SAFETY INSTRUCTIONS

WARNING: This chapter contains important safety and operating instructions. Read and keep this manual for future reference.

1. Before using the unit, read all instructions and cautionary markings on the unit, the batteries and all appropriate sections of this manual.
2. **CAUTION** --To reduce risk of injury, charge only deep-cycle lead acid type rechargeable batteries. Other types of batteries may burst, causing personal injury and damage.
3. Do not disassemble the unit. Take it to a qualified service center when service or repair is required. Incorrect re-assembly may result in a risk of electric shock or fire.
4. To reduce risk of electric shock, disconnect all wirings before attempting any maintenance or cleaning. Turning off the unit will not reduce this risk.
5. **CAUTION** – Only qualified personnel can install this device with battery.
6. **NEVER** charge a frozen battery.
7. For optimum operation of this inverter/charger, please follow required spec to select appropriate cable size. It's very important to correctly operate this inverter/charger.
8. Be very cautious when working with metal tools on or around batteries. A potential risk exists to drop a tool to spark or short circuit batteries or other electrical parts and could cause an explosion.
9. Please strictly follow installation procedure when you want to disconnect AC or DC terminals. Please refer to INSTALLATION section of this manual for the details.
10. One piece of 150A fuse is provided as over-current protection for the battery supply.
11. GROUNDING INSTRUCTIONS -This inverter/charger should be connected to a permanent grounded wiring system. Be sure to comply with local requirements and regulation to install this inverter.
12. NEVER cause AC output and DC input short circuited. Do NOT connect to the mains when DC input short circuits.
13. **Warning!!** Only qualified service persons are able to service this device. If errors still persist after following troubleshooting table, please send this inverter/charger back to local dealer or service center for maintenance.
14. **WARNING:** Because this inverter is non-isolated, only three types of PV modules are acceptable: single crystalline, poly crystalline with class A-rated and CIGS modules. To avoid any malfunction, do not connect any PV modules with possible current leakage to the inverter. For example, grounded PV modules will cause current leakage to the inverter. When using CIGS modules, please be sure NO grounding.
15. **CAUTION:** It's requested to use PV junction box with surge protection. Otherwise, it will cause damage on inverter when lightning occurs on PV modules.

INTRODUCTION

This is a multi-function inverter/charger, combining functions of inverter, solar charger and battery charger to offer uninterruptible power support with portable size. Its comprehensive LCD display offers user-configurable and easy-accessible button operation such as battery charging current, AC/solar charger priority, and acceptable input voltage based on different applications.

Features

- Pure sine wave inverter
- Configurable input voltage range for home appliances and personal computers via LCD setting
- Configurable battery charging current based on applications via LCD setting
- Configurable AC/Solar Charger priority via LCD setting
- Compatible to mains voltage or generator power
- Auto restart while AC is recovering
- Overload/ Over temperature/ short circuit protection
- Smart battery charger design for optimized battery performance
- Cold start function
- Removable LCD control module
- Reversed communication port for BMS (RS485, CAN-BUS, RS232)
- Build-in Bluetooth for mobile monitoring (Requires App), OTG USB function, dusk filters
- Configurable AC/PV Output usage timer and prioritization

Basic System Architecture

The following illustration shows basic application for this inverter/charger. It also includes following devices to have a complete running system:

- Generator or Utility.
- PV modules

Consult with your system integrator for other possible system architectures depending on your requirements.

This inverter can power all kinds of appliances in home or office environment, including motor-type appliances such as tube light, fan, refrigerator and air conditioner.

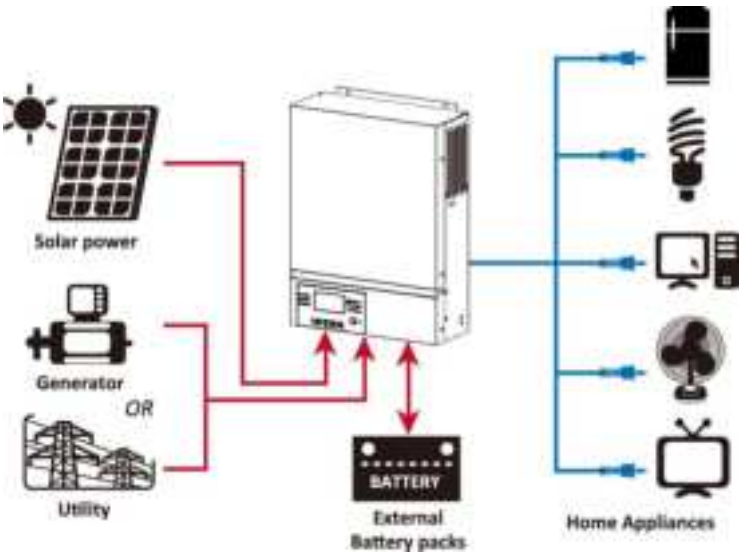

Figure 1 Hybrid Power System

Product Overview

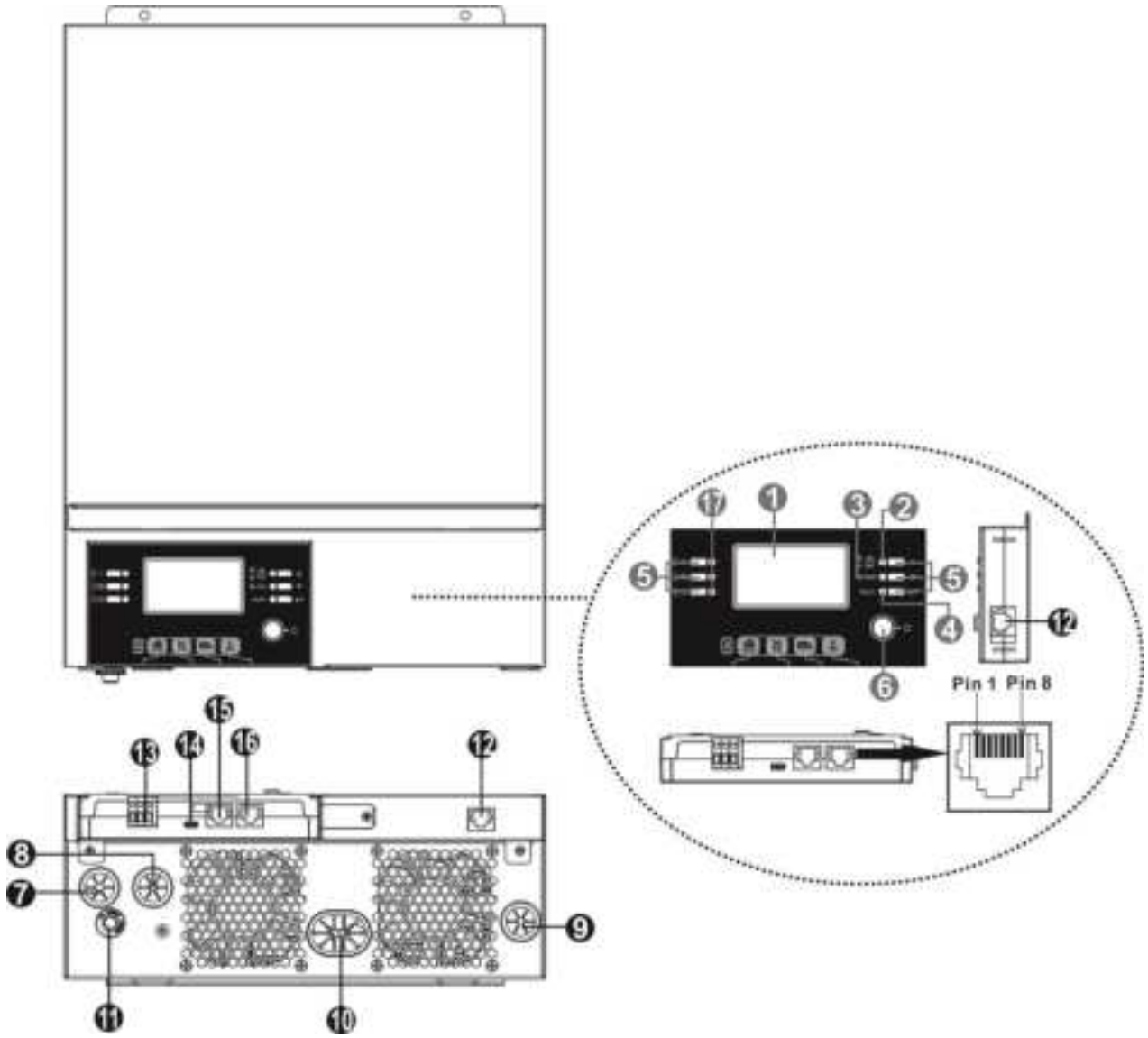

1. LCD display
2. Status indicator
3. Charging indicator
4. Fault indicator
5. Function buttons
6. Power on/off switch
7. AC input
8. AC output
9. PV input
10. Battery input
11. Circuit breaker
12. Remote LCD panel communication port
13. Dry contact
14. USB communication port
15. BMS Communication port: CAN and RS232 or RS485
16. RS-232 communication port
17. LED indicators for USB function setting/ Output source priority timer / Charger source priority setting

INSTALLATION

Unpacking and Inspection

Before installation, please inspect the unit. Be sure that nothing inside the package is damaged. You should have received the following items inside of package:

- The unit x 1
- User manual x 1
- RS232 Communication cable x 1
- Software CD x 1
- DC Fuse x 1

Preparation

Before connecting all wirings, please take off bottom cover by removing two screws as shown below. Remove the cables from the cover.

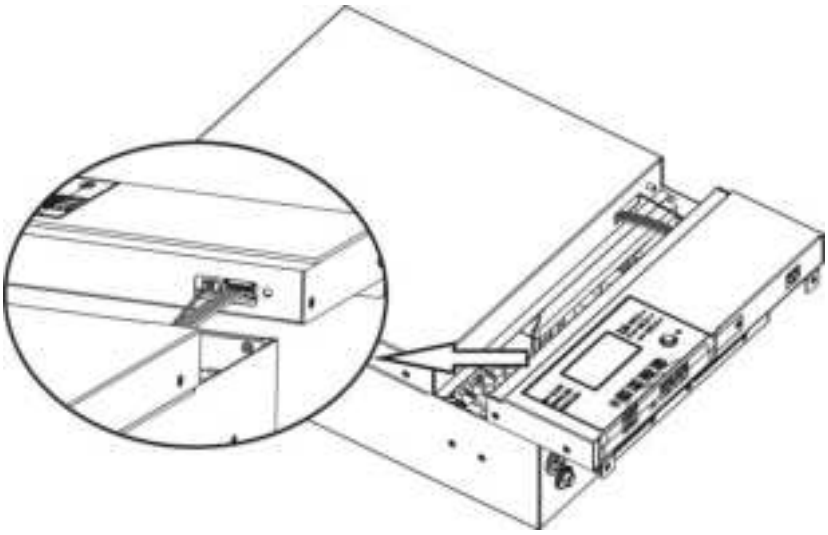

Mounting the Unit

Consider the following points before selecting where to install:

- Do not mount the inverter on flammable construction materials.
- Mount on a solid surface
- Install this inverter at eye level in order to allow the LCD display to be read at all times.
- For proper air circulation to dissipate heat, allow a clearance of approx. 20 cm to the side and approx. 50 cm above and below the unit.
- The ambient temperature should be between 0°C and 55°C to ensure optimal operation.
- The recommended installation position is to be adhered to the wall vertically.
- Be sure to keep other objects and surfaces as shown in the diagram to guarantee sufficient heat dissipation and to have enough space for removing wires.

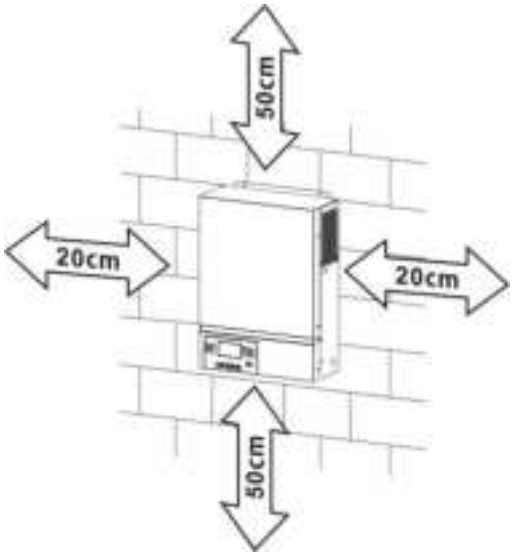

⚠ **SUITABLE FOR MOUNTING ON CONCRETE OR OTHER NON-COMBUSTIBLE SURFACE ONLY.**

Install the unit by screwing three screws. It's recommended to use M4 or M5 screws.

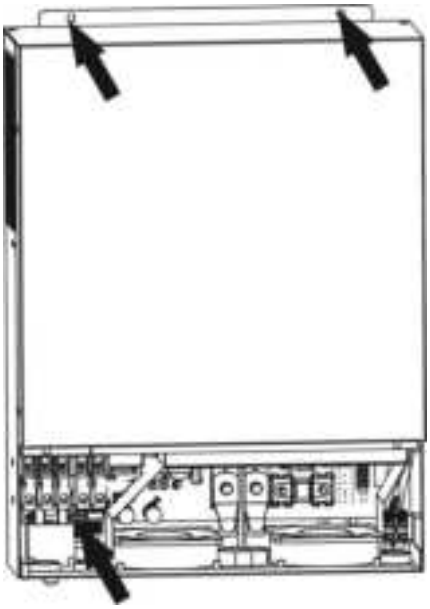

Battery Connection

CAUTION: For safety operation and regulation compliance, it's requested to install a separate DC over-current protector or disconnect device between battery and inverter. It may not be requested to have a disconnect device in some applications, however, it's still requested to have over-current protection installed. Please refer to typical amperage in below table as required fuse or breaker size.

Ring terminal:

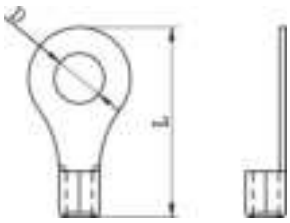

WARNING! All wiring must be performed by a qualified personnel.
WARNING! It's very important for system safety and efficient operation to use appropriate cable for battery connection. To reduce risk of injury, please use the proper recommended cable as below.

Recommended battery cable size:

Model	Typical Amperage	Wire Size	Cable mm^2	Ring Terminal Dimensions		Torque Value
				D (mm)	L (mm)	
1.5KW	71A	1*6AWG	14	N/A		2 Nm
3KW	142A	1*2AWG	38	8.4	39.2	5 Nm
5KW	118A	1*2AWG	38	8.4	39.2	

Please follow below steps to implement battery connection:

1. Assemble battery ring terminal based on recommended battery cable and terminal size. This step is only applied for 3KW/5KW models.
2. Connect all battery packs as units requires. It's suggested to connect at least 100Ah capacity battery for 1.5KW/3KW model and at least 200Ah capacity battery for 5KW model.

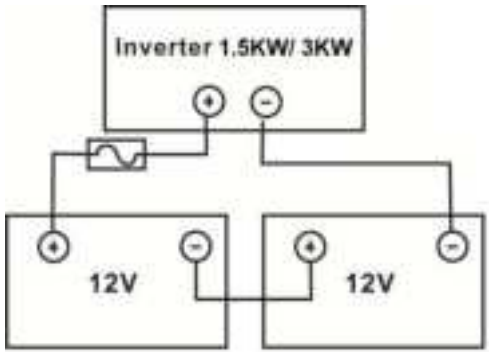

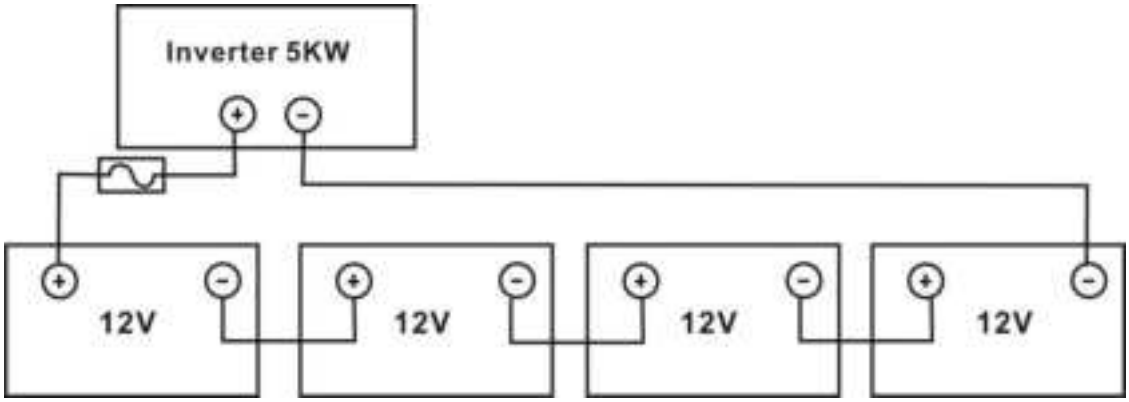

3. For 1.5KW model, simply remove insulation sleeve 18mm for positive and negative wires. Then, connect these two wires at both the battery and the inverter/charger. For 3KW/5KW models, please insert the ring terminal of battery cable flatly into battery connector of inverter and make sure the bolts are tightened. Refer to battery cable size for torque value. Make sure polarity at both the battery and the inverter/charge is correctly connected and ring terminals are tightly screwed to the battery terminals.

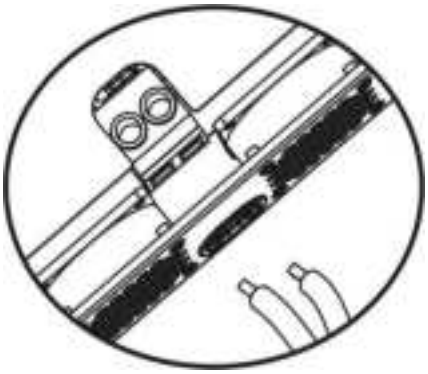

1.5KW Model

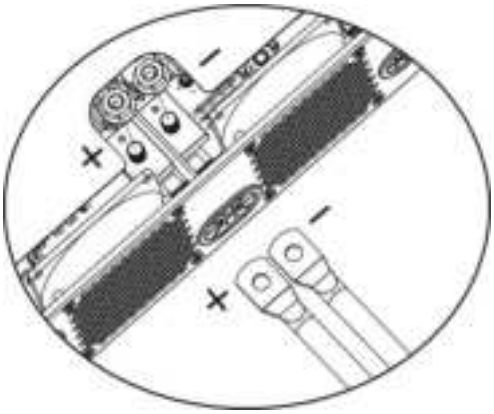

3KW/5KW Model

⚠	**WARNING: Shock Hazard** Installation must be performed with care due to high battery voltage in series.

⚠	**CAUTION!!** Do not place anything between the flat part of the inverter terminal and the ring terminal. Otherwise, overheating may occur. **CAUTION!!** Do not apply anti-oxidant substance on the terminals before terminals are connected tightly. **CAUTION!!** Before making the final DC connection or closing DC breaker/disconnector, be sure positive (+) must be connected to positive (+) and negative (-) must be connected to negative (-).

AC Input/Output Connection

CAUTION!! Before connecting to AC input power source, please install a **separate** AC breaker between inverter and AC input power source. This will ensure the inverter can be securely disconnected during maintenance and fully protected from over current of AC input. The recommended spec of AC breaker is 16A for 1.5KW and 32A for 3KW and 50A for 5KW.

CAUTION!! There are two terminal blocks with "IN" and "OUT" markings. Please do NOT mis-connect input and output connectors.

WARNING! All wiring must be performed by a qualified personnel.

WARNING! It's very important for system safety and efficient operation to use appropriate cable for AC input connection. To reduce risk of injury, please use the proper recommended cable size as below.

Suggested cable requirement for AC wires

Model	Gauge	Cable (mm^2)	Torque Value
1.5KW	14 AWG	2.5	1.2 Nm
3KW	12 AWG	4	1.2 Nm
5KW	10 AWG	6	1.2 Nm

Please follow below steps to implement AC input/output connection:

1. Before making AC input/output connection, be sure to open DC protector or disconnector first.
2. Remove insulation sleeve 10mm for six conductors. And shorten phase L and neutral conductor N 3 mm.
3. Insert AC input wires according to polarities indicated on terminal block and tighten the terminal screws. Be sure to connect PE protective conductor (⏚) first.

   ⏚**→Ground (yellow-green)**

   L→LINE (brown or black)

   N→Neutral (blue)

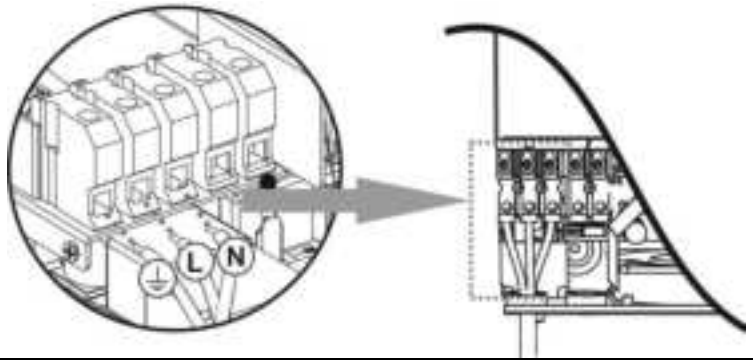

⚠	**WARNING:** Be sure that AC power source is disconnected before attempting to hardwire it to the unit.

4. Then, insert AC output wires according to polarities indicated on terminal block and tighten terminal screws. Be sure to connect PE protective conductor (⏚) first.

   ⏚**→Ground (yellow-green)**

   L→LINE (brown or black)

   N→Neutral (blue)

5. Make sure the wires are securely connected.

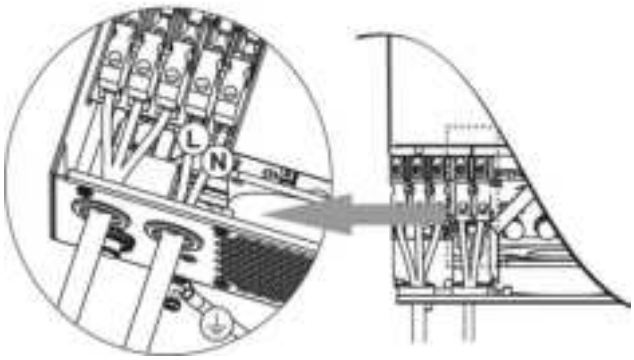

CAUTION: Appliances such as air conditioner are required at least 2~3 minutes to restart because it's required to have enough time to balance refrigerant gas inside of circuits. If a power shortage occurs and recovers in a short time, it will cause damage to your connected appliances. To prevent this kind of damage, please check manufacturer of air conditioner if it's equipped with time-delay function before installation. Otherwise, this inverter/charger will trig overload fault and cut off output to protect your appliance but sometimes it still causes internal damage to the air conditioner.

PV Connection

CAUTION: Before connecting to PV modules, please install **separately** a DC circuit breaker between inverter and PV modules.

WARNING! It's very important for system safety and efficient operation to use appropriate cable for PV module connection. To reduce risk of injury, please use the proper recommended cable size as below.

Model	Wire Size	Cable (mm^2)	Torque value (max)
1.5KW	1 x 14AWG	2.5	1.2 Nm
3KW/5KW	1 x 12AWG	4	1.2 Nm

WARNING: Because this inverter is non-isolated, only three types of PV modules are acceptable: single crystalline, poly crystalline with class A-rated and CIGS modules.
To avoid any malfunction, do not connect any PV modules with possible current leakage to the inverter. For example, grounded PV modules will cause current leakage to the inverter. When using CIGS modules, please be sure NO grounding.

CAUTION: It's requested to use PV junction box with surge protection. Otherwise, it will cause damage on inverter when lightning occurs on PV modules.

PV Module Selection:
When selecting proper PV modules, please be sure to consider below parameters:
1. Open circuit Voltage (Voc) of PV modules not exceeds max. PV array open circuit voltage of inverter.
2. Open circuit Voltage (Voc) of PV modules should be higher than min. battery voltage.

INVERTER MODEL	1.5KW	3KW	5KW
Max. PV Array Power	2000W	4000W	
Max. PV Array Open Circuit Voltage	400Vdc	500Vdc	
PV Array MPPT Voltage Range	120Vdc~380Vdc	120Vdc~450Vdc	

Take 250Wp PV module as an example. After considering above two parameters, the recommended module configurations are listed as below table.

Solar Panel Spec. (reference) - 250Wp - Vmp: 30.1Vdc - Imp: 8.3A - Voc: 37.7Vdc - Isc: 8.4A - Cells: 60	SOLAR INPUT (For 1.5KW, Min in serial: 5 pcs, max. in serial: 8 pcs. For 3KW/5KW, Min in serial: 6 pcs, max. in serial: 12 pcs.)	Q'ty of panels	Total input power
	6 pcs in serial	6 pcs	1500W
	8 pcs in serial	8 pcs	2000W
	12 pcs in serial	12 pcs	3000W
	8 pieces in serial and 2 sets in parallel	16 pcs	4000W

PV Module Wire Connection
Please follow below steps to implement PV module connection:

1. Remove insulation sleeve 7 mm for positive and negative conductors.
2. Suggest to put bootlace ferrules on the end of positive and negative wires with a proper crimping tool.
3. Check correct polarity of wire connection from PV modules and PV input connectors. Then, connect positive pole (+) of connection wire to positive pole (+) of PV input connector. Connect negative pole (-) of connection wire to negative

pole (-) of PV input connector. Screw two wires tightly in clockwise direction.
Recommended tool: 4mm blade screwdriver

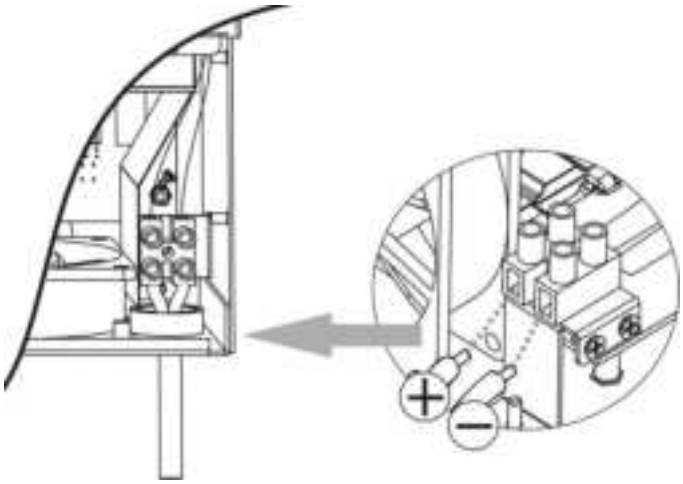

Final Assembly

After connecting all wirings, please put bottom cover back by screwing two screws as shown below.

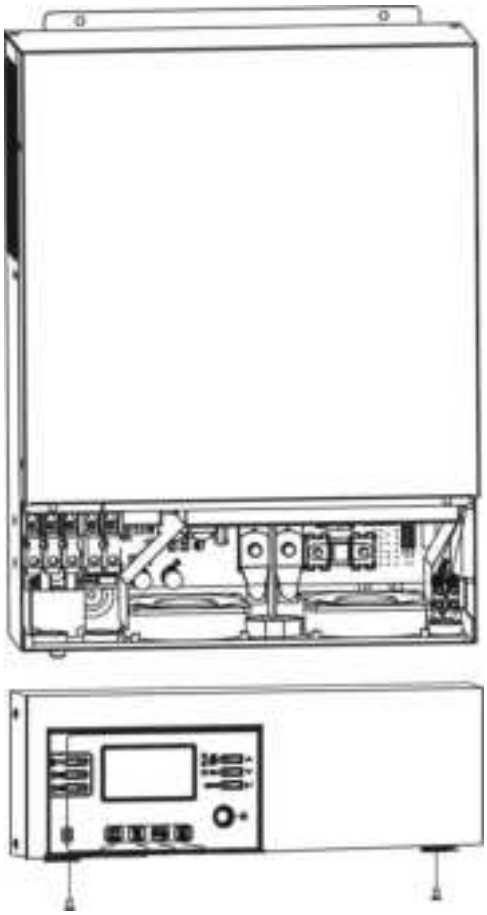

Remote Display Panel Installation

The LCD panel can be removable and installed in a remote site with an optional communication cable. Please follow below steps to implement this remote panel installation.

Step 1. Loosen the screw on the bottom of LCD panel and push down the panel from the bottom case. Then, pull out the cable from the remote communication port. Be sure to screw back the fixing plate to the inverter.

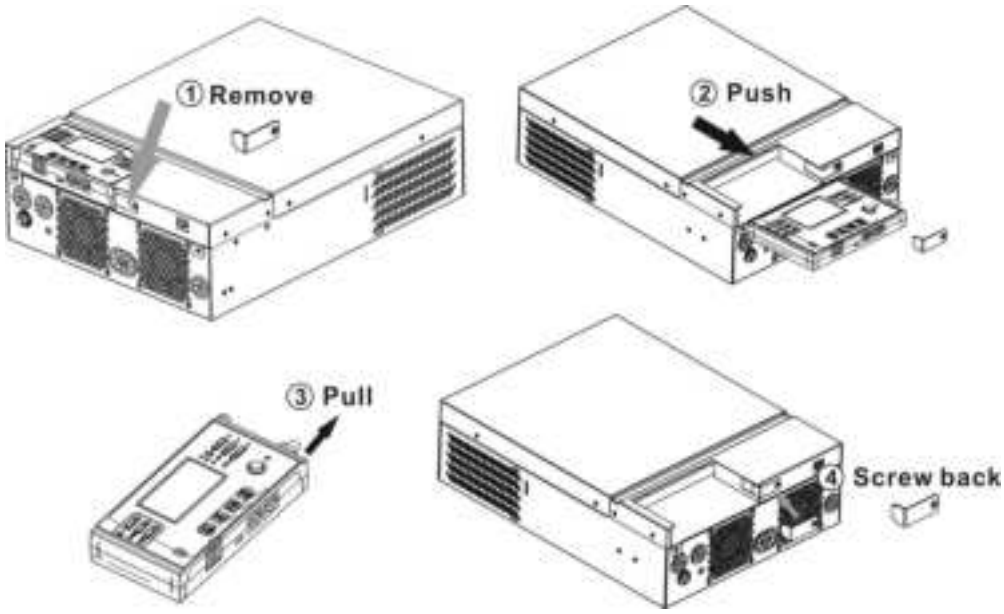

Step 2. Drill two holes in the marked locations with two screws as shown below chart. Place the panel on the surface and align the mounting holes with the two screws. Then, use one more screw on the top to fix the panel to the wall and check if the remote panel is firmly secured.

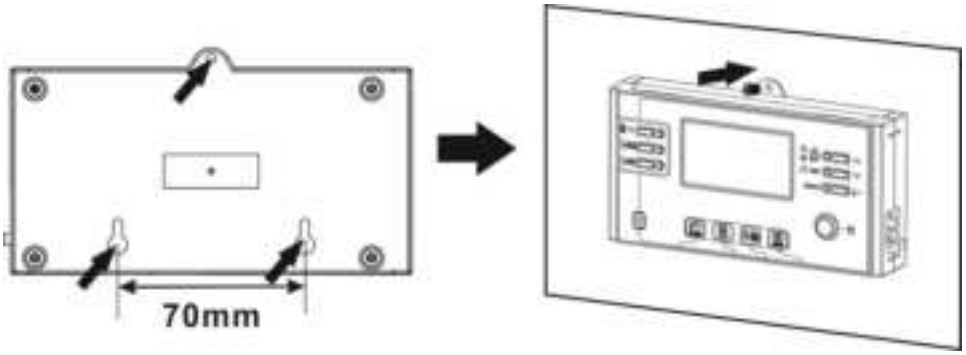

Note: Installation to the wall should be implemented with the proper screws. Refer chart for recommended spec of screws.

Step 3. Connect LCD panel to the inverter with an optional RJ45 communication cable as below chart.

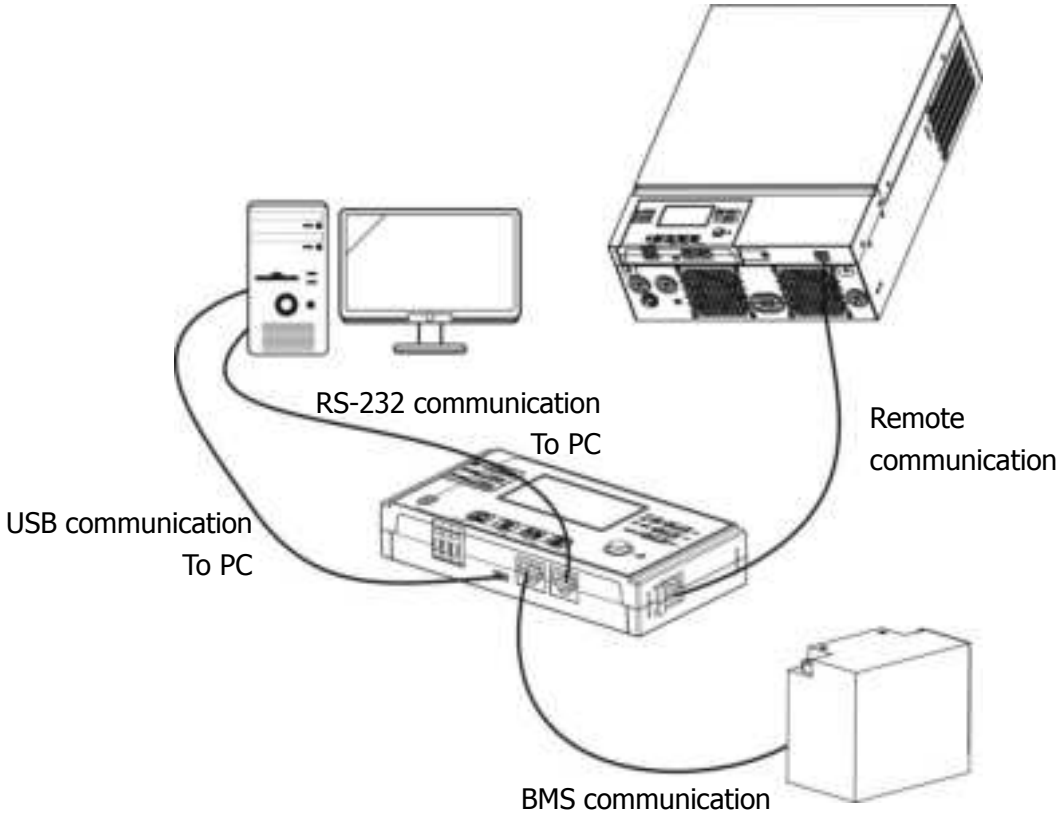

Communication Connection

Serial Connection

Please use supplied communication cable to connect to inverter and PC. Insert bundled CD into a computer and follow on-screen instruction to install the monitoring software. For the detailed software operation, please check user manual of software inside of CD.

Bluetooth Connection

This series is built in Bluetooth technology. You may simply go to google play to install "WatchPower". It allows wireless communication up to 6~7m in an open space.

Dry Contact Signal

There is one dry contact (3A/250VAC) available on the rear panel. It could be used to deliver signal to external device when battery voltage reaches warning level.

Unit Status	Condition			Dry contact port: 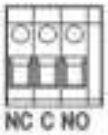	
				NC & C	NO & C
Power Off	Unit is off and no output is powered.			Close	Open
Power On	Output is powered from Utility.			Close	Open
	Output is powered from Battery power or Solar energy.	Program 01 set as USB (utility first)	Battery voltage < Low DC warning voltage	Open	Close
			Battery voltage > Setting value in Program 13 or battery charging reaches floating stage	Close	Open
		Program 01 is set as SBU (SBU priority) or SUB (solar first)	Battery voltage < Setting value in Program 12	Open	Close
			Battery voltage > Setting value in Program 13 or battery charging reaches floating stage	Close	Open

OPERATION

Power ON/OFF

Once the unit has been properly installed and the batteries are connected well, simply press On/Off switch (located on the display panel) to turn on the unit.

Operation and Display Panel

The operation and display panel, shown in below chart, is on the front panel of the inverter. It includes six indicators, six function keys, on/off switch and a LCD display, indicating the operating status and input/output power information.

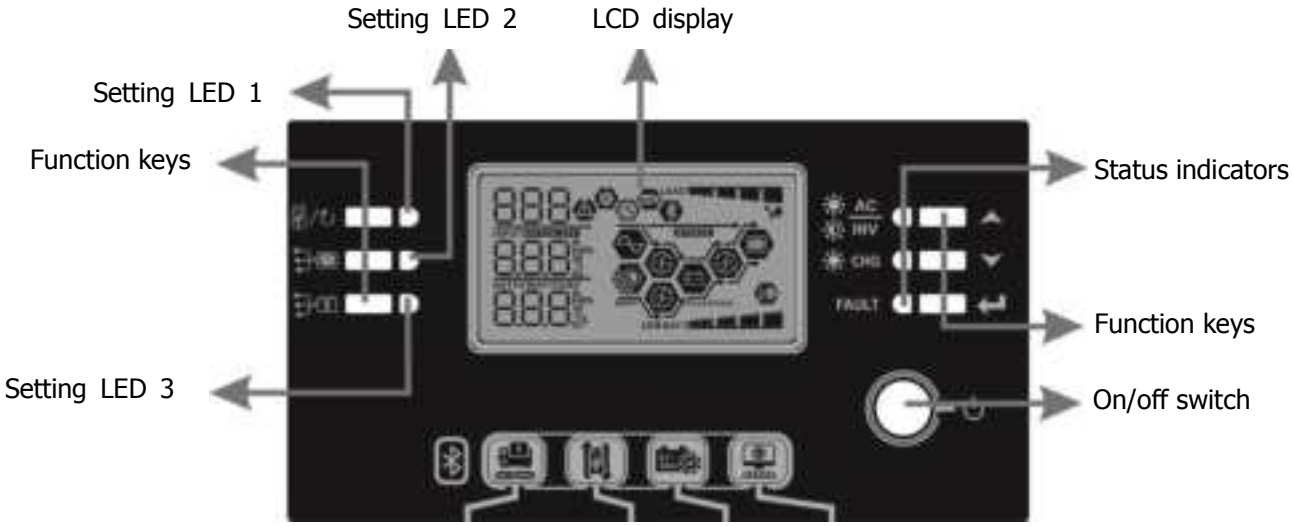

Indicators

LED Indicator		Color	Solid/Flashing	Messages
Setting LED 1		Green	Solid On	Output powered by utility
Setting LED 2		Green	Solid On	Output powered by PV
Setting LED 3		Green	Solid On	Output powered by battery
Status indicators	AC / INV	Green	Solid On	Output is available in bypass mode
			Flashing	Output is powered by battery in inverter mode
	CHG	Green	Solid On	Battery is fully charged
			Flashing	Battery is charging.
	FAULT	Red	Solid On	Fault mode
			Flashing	Warning mode

Function Keys

Function Key		Description
	ESC	Exit the setting
	USB function setting	Select USB OTG functions
	Timer setting for the Output source priority	Setup the timer for prioritizing the output source
	Timer setting for the Charger source priority	Setup the timer for prioritizing the charger source
	Up	To last selection
	Down	To next selection
	Enter	To confirm/enter the selection in setting mode

LCD Display Icons

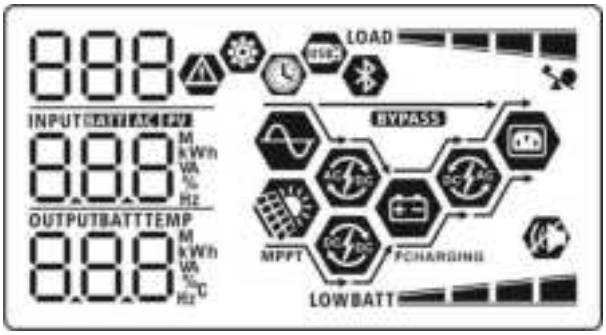

Icon	Function description
Input Source Information	
AC	Indicates the AC input.
PV	Indicates the PV input
	Indicate input voltage, input frequency, PV voltage, charger current, charger power, battery voltage.
Configuration Program and Fault Information	
	Indicates the setting programs.
	Indicates the warning and fault codes. Warning: flashing with warning code. Fault: lighting with fault code
Output Information	
	Indicate output voltage, output frequency, load percent, load in VA, load in Watt and discharging current.
Battery Information	
BATT	Indicates battery level by 0-24%, 25-49%, 50-74% and 75-100% in battery mode and charging status in line mode.
In AC mode, it will present battery charging status.	

Status	Battery voltage	LCD Display

Constant Current mode / Constant Voltage mode	<2V/cell	4 bars will flash in turns.
	2 ~ 2.083V/cell	Bottom bar will be on and the other three bars will flash in turns.
	2.083 ~ 2.167V/cell	Bottom two bars will be on and the other two bars will flash in turns.
	> 2.167 V/cell	Bottom three bars will be on and the top bar will flash.
Floating mode. Batteries are fully charged.		4 bars will be on.

In battery mode, it will present battery capacity.

Load Percentage	Battery Voltage	LCD Display
Load >50%	< 1.85V/cell	LOWBATT
	1.85V/cell ~ 1.933V/cell	BATT
	1.933V/cell ~ 2.017V/cell	BATT
	> 2.017V/cell	BATT
Load < 50%	< 1.892V/cell	LOWBATT
	1.892V/cell ~ 1.975V/cell	BATT
	1.975V/cell ~ 2.058V/cell	BATT
	> 2.058V/cell	BATT

Load Information		
	Indicates overload.	
LOAD	Indicates the load level by 0-24%, 25-49%, 50-74% and 75-100%.	
	0%~24%	25%~49%
	LOAD	LOAD
	50%~74%	75%~100%
	LOAD	LOAD

Mode Operation Information	
	Indicates unit connects to the mains.
MPPT	Indicates unit connects to the PV panel.
BYPASS	Indicates load is supplied by utility power.
	Indicates the utility charger circuit is working.
	Indicates the solar charger circuit is working.
	Indicates the DC/AC inverter circuit is working.
	Indicates unit alarm is disabled.
	Indicates Bluetooth is connected.
USB	Indicates USB disk is connected.
	Time display page

LCD Setting

General Setting

After pressing and holding "↵" button for 3 seconds, the unit will enter setting mode. Press "▲" or "▼" button to select setting programs. And then, press "↵" button to confirm the selection or "/" button to exit.

Setting Programs:

Program	Description	Selectable option	
00	Exit setting mode	Escape 00 ESC	
01	Output source priority: To configure load power source priority	Utility first (default) 01 USb	Utility will provide power to the loads as first priority. Solar and battery energy will provide power to the loads only when utility power is not available.
		Solar first 01 SUb	Solar energy provides power to the loads as first priority. If solar energy is not sufficient to power all connected loads, battery energy will supply power the loads at the same time. Utility provides power to the loads only when any one condition happens: - Solar energy is not available - Battery voltage drops to low-level warning voltage or the setting point in program 12.
		SBU priority 01 SbU	Solar energy provides power to the loads as first priority. If solar energy is not sufficient to power all connected loads, battery energy will supply power to the loads at the same time. Utility provides power to the loads only when battery voltage drops to either low-level warning voltage or the setting point in program 12.

02	Maximum charging current: To configure total charging current for solar and utility chargers. (Max. charging current = utility charging current + solar charging current)	10A 02 10	20A 02 20
		30A 02 30	40A 02 40
		50A 02 50	60A (default) 02 60
		70A (only for 3KW/5KW) 02 70	80A (only for 3KW/5KW) 02 80
03	AC input voltage range	Appliances (default) 03 APL	If selected, acceptable AC input voltage range will be within 90-280VAC.
		UPS 03 UPS	If selected, acceptable AC input voltage range will be within 170-280VAC.
05	Battery type	AGM (default) 05 AGm	Flooded 05 FLd
		User-Defined 05 USE	If "User-Defined" is selected, battery charge voltage and low DC cut-off voltage can be set up in program 26, 27 and 29.

06	Auto restart when overload occurs	Restart disable (default) 06 LTd	Restart enable 06 LTE
07	Auto restart when over temperature occurs	Restart disable (default) 07 tTd	Restart enable 07 tTE
09	Output frequency	50Hz (default) 09 50.	60Hz 09 60.
10	Output voltage	220V 10 220.	230V (default) 10 230.
		240V 10 240.	
11	Maximum utility charging current Note: If setting value in program 02 is smaller than that in program in 11, the inverter will apply charging current from program 02 for utility charger.	2A 11 2.	10A 11 10.
		20A 11 20.	30A (default) 11 30.
		40A 11 40.	50A (only for 3KW/5KW) 11 50.

		60A (only for 3KW/5KW) 11 60	
12	Setting voltage point back to utility source when selecting “SBU” (SBU priority) or “SUB” (solar first) in program 01.	Available options in 1.5KW/3KW model:	
		22.0V 12 22.0	22.5V 12 22.5
		23.0V (default) 12 23.0	23.5V 12 23.5
		24.0V 12 24.0	24.5V 12 24.5
		25.0V 12 25.0	25.5V 12 25.5
		Available options in 5KW model:	
		44V 12 44	45V 12 45
		46V (default) 12 46	47V 12 47

12	Setting voltage point back to utility source when selecting "SBU" (SBU priority) or "SUB" (solar first) in program 01.	48V 12 48	49V 12 49
		50V 12 50	51V 12 51
13	Setting voltage point back to battery mode when selecting "SBU" (SBU priority) or "SUB" (solar first) in program 01.	Available options in 1.5KW/3KW model:	
		Battery fully charged 13 FUL	24V 13 24.0
		24.5V 13 24.5	25V 13 25.0
		25.5V 13 25.5	26V 13 26.0
		26.5V 13 26.5	27V (default) 13 27.0
		27.5V 13 27.5	28V 13 28.0

13	Setting voltage point back to battery mode when selecting “SBU” (SBU priority) or “SUB” (solar first) in program 01.	28.5V 13 28.5	29V 13 29.0
		Available options in 5KW model:	
		Battery fully charged 13 FUL	48V 13 48.0
		49V 13 49.0	50V 13 50.0
		51V 13 51.0	52V 13 52.0
		53V 13 53.0	54V (default) 13 54.0
		55V 13 55.0	56V 13 56.0
		57V 13 57.0	58V 13 58.0

16	Charger source priority: To configure charger source priority	If this inverter/charger is working in Line, Standby or Fault mode, charger source can be programmed as below:	
		Solar first 16 CSO	Solar energy will charge battery as first priority. Utility will charge battery only when solar energy is not available.
		Solar and Utility (default) 16 SNU	Solar energy and utility will charge battery at the same time.
		Only Solar 16 OSO	Solar energy will be the only charger source no matter utility is available or not.
		If this inverter/charger is working in Battery mode, only solar energy can charge battery. Solar energy will charge battery if it's available and sufficient.	
18	Alarm control	Alarm on (default) 18 bON	Alarm off 18 bOF
19	Auto return to default display screen	Return to default display screen (default) 19 ESP	If selected, no matter how users switch display screen, it will automatically return to default display screen (Input voltage /output voltage) after no button is pressed for 1 minute.
		Stay at latest screen 19 LEP	If selected, the display screen will stay at latest screen user finally switches.

20	Backlight control	Backlight on (default) 20 LON	Backlight off 20 LOF
22	Beeps while primary source is interrupted	Alarm on (default) 22 AON	Alarm off 22 AOF
23	Overload bypass: When enabled, the unit will transfer to line mode if overload occurs in battery mode.	Bypass disable (default) 23 byd	Bypass enable 23 byE
25	Record Fault code	Record enable (default) 25 FEN	Record disable 25 FdS
26	Bulk charging voltage (C.V voltage)	1.5KW/3KW default setting: 28.2V 26 Cu BATT 28.2V	5KW default setting: 56.4V 26 Cu BATT 56.4V
		If self-defined is selected in program 5, this program can be set up. Setting range is from 25.0V to 31.5V for 1.5KW/3KW model and 48.0V to 61.0V for 5KW model. Increment of each click is 0.1V.	
27	Floating charging voltage	1.5KW/3KW default setting: 27.0V 27 FLu BATT 27.0V	5KW default setting: 54.0V 27 FLu BATT 54.0V

		If self-defined is selected in program 5, this program can be set up. Setting range is from 25.0V to 31.5V for 1.5KW/3KW model and 48.0V to 61.0V for 5KW model. Increment of each click is 0.1V.	
29	Low DC cut-off voltage	1.5KW/3KW default setting: 21.0V 29 C0u BATT 21.0V	5KW default setting: 42.0V 29 C0u BATT 42.0V
		If self-defined is selected in program 5, this program can be set up. Setting range is from 21.0V to 24.0V for 1.5KW/3KW model and 42.0V to 48.0V for 5KW model. Increment of each click is 0.1V. Low DC cut-off voltage will be fixed to setting value no matter what percentage of load is connected.	
30	Battery equalization	Battery equalization 30 EEn	Battery equalization disable (default) 30 EdS
		If "Flooded" or "User-Defined" is selected in program 05, this program can be set up.	
31	Battery equalization voltage	1.5KW/3KW default setting: 29.2V 31 Eu BATT 29.2V	5KW default setting: 58.4V 31 Eu BATT 58.4V
		Setting range is from 25.0V to 31.5V for 1.5KW/3KW model and 48.0V to 61.0V for 5KW model. Increment of each click is 0.1V.	
33	Battery equalized time	60min (default) 33 60	Setting range is from 5min to 900min. Increment of each click is 5min.
34	Battery equalized timeout	120min (default) 34 120	Setting range is from 5min to 900 min. Increment of each click is 5 min.

35	Equalization interval	30days (default) 35 30d	Setting range is from 0 to 90 days. Increment of each click is 1 day
36	Equalization activated immediately	Enable 36 AEn	Disable (default) 36 AdS
		If equalization function is enabled in program 30, this program can be set up. If "Enable" is selected in this program, it's to activate battery equalization immediately and LCD main page will shows "E9". If "Disable" is selected, it will cancel equalization function until next activated equalization time arrives based on program 35 setting. At this time, "E9" will not be shown in LCD main page.	
37	Reset PV and Load energy storage	Not reset(Default) 37 nrt	Reset 37 rSt
93	Erase all data log	Not reset(Default) 93 nrt	Reset 93 rSt
94	Data log stored period	3 days 94 3	5 days 94 5
		10 days (default) 94 10	20 days 94 20
		30 days 94 30	60 days 94 60

95	Time setting – Minute	For minute setting, the range is from 00 to 59. 95 min 00
96	Time setting – Hour	For hour setting, the range is from 00 to 23. 96 HOU 00
97	Time setting– Day	For day setting, the range is from 00 to 31. 97 dAY 01
98	Time setting– Month	For month setting, the range is from 01 to 12. 98 mON 01
99	Time setting – Year	For year setting, the range is from 17 to 99. 99 YEA 17

Function Setting

There are three function keys on the display panel to implement special functions such as USB OTG, timer setting for output source priority and timer setting for charger source priority.

1. USB Function Setting

Please insert USB disk into USB port ( ). Press and hold "/" button for 3 seconds to enter USB function setting mode. These functions include to upgrade inverter firmware, export data log and re-write internal parameters from USB disk.

Procedure	LCD Screen
Step 1: Press and hold "/" button for 3 seconds to enter USB function setting mode.	UPG SEt LOG
Step 2: Press "/", "" or "" button to enter the selectable setting programs.	

Step 3: Please select setting program by following each procedure.

Program#	Operation Procedure	LCD Screen
/: Upgrade firmware	If pressing "/" button to proceed the firmware upgrade function. If the selected function is ready, LCD will display "rdy". Please press "/" button to confirm the selection again.	UPG rdy
	Press "" to select "Yes" or "" button to select "No". Then, press "/" button to exit setting mode.	UPG YES NO
: Re-write internal parameters	If pressing "" button to proceed parameters re-write from USB function. If selected function is ready, LCD will display "rdy". Please press "/" button to confirm the selection again.	SEt rdy
	Press "" to select "Yes" or "" button to select "No". Then, press "/" button to exit setting mode.	SEt YES NO
	IMPORTANT NOTE: After this function is executed, partial LCD setting programs will be locked. For the detailed information, please check your installer directly.	
: Export data log	If pressing "" button to export data log from USB disk to the inverter. If selected function is ready, LCD will display "rdy". Please press "/" button to confirm the selection again.	LOG rdy
	Press "" to select "Yes" or "" button to select "No". Then, press "/" button to exit setting mode.	LOG YES NO

If no button is pressed for 1 minute, it will automatically return to main screen.

Error message for USB On-the-Go functions:

Error Code	Messages
U01	No USB disk is detected.
U02	USB disk is protected from copy.
U03	Document inside the USB disk with wrong format.

If any error occurs, error code will only show 3 seconds. After three seconds, it will automatically return to display screen.

2. Timer Setting for Output Source Priority

This timer setting is to set up the output source priority per day.

Procedure	LCD Screen
Step 1: Press and hold "" button for 3 seconds to enter timer setting mode for output source priority.	USb SUb SbU
Step 2: Press "", "" or "" button to enter the selectable setting programs.	

Step 3: Please select setting program by following each procedure.

Program#	**Operation Procedure**	**LCD Screen**
	If pressing "" button to set up timer. Press "" to select start time. Press "" or "" button to set the start time and then press "" button to confirm. Press "" button to select end time. Press "" or "" button to set the end time and then press "" button to confirm. The setting range is from 00 to 23. Increment of each click is 1 hour.	USb 00 23
	If pressing "" button to set up timer. Press "" to select start time. Press "" or "" button to set the start time and then press "" button to confirm. Press "" button to select end time. Press "" or "" button to set the end time and then press "" button to confirm. The setting range is from 00 to 23. Increment of each click is 1 hour.	SUb 00 23
	If pressing "" button to set up timer. Press "" to select start time. Press "" or "" button to set the start time and then press "" button to confirm. Press "" button to select end time. Press "" or "" button to set the end time and then press "" button to confirm. The setting range is from 00 to 23. Increment of each click is 1 hour.	SbU 00 23

Press "" button to exit setting mode.

3. Timer Setting for the Charger Source Priority

This timer setting is to set up the charger source priority per day.

Procedure	LCD Screen
Step 1: Press and hold "" button for 3 seconds to enter timer setting mode for charger source priority.	CSO SNU OSO
Step 2: Press "", "" or "" button to enter the selectable setting programs.	

Step 3: Please select setting program by following each procedure.

Program#	**Operation Procedure**	**LCD Screen**
	If pressing "" button to set up timer. Press "" to select start time. Press "" or "" button to set the start time and then press "" button to confirm. Press "" button to select end time. Press "" or "" button to set the end time and then press "" button to confirm. The setting range is from 00 to 23. Increment of each click is 1 hour.	CSO 00 23

	If pressing "" button to set up timer. Press "" to select start time. Press "▲" or "▼" button to set the start time and then press "↵" button to confirm. Press "" button to select end time. Press "▲" or "▼" button to set the end time and then press "↵" button to confirm. The setting range is from 00 to 23. Increment of each click is 1 hour.	SAU 00 23
	If pressing "" button to set up timer. Press "" to select start time setting. Press "▲" or "▼" button to set the start time and then press "↵" button to confirm. Press "" button to select end time. Press "▲" or "▼" button to set the end time and then press "↵" button to confirm. The setting range is from 00 to 23. Increment of each click is 1 hour.	050 00 23

Press "/" button to exit setting mode.

Display Setting

The LCD display information will be switched in turns by pressing "UP" or "DOWN" key. The selectable information is switched as the following table in order.

Selectable information	LCD display
Input voltage/Output voltage (Default Display Screen)	Input Voltage=230V, output voltage=230V 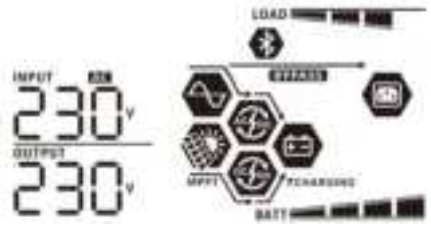
Input frequency	Input frequency=50Hz 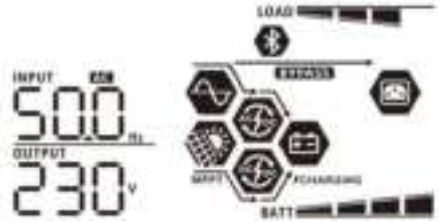
PV voltage	PV voltage=260V 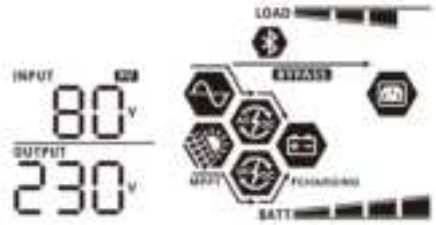
PV current	PV current = 2.5A
PV power	PV power = 500W 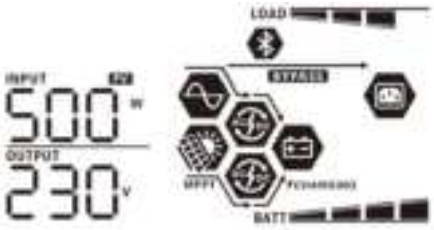

Charging current	AC and PV charging current=50A 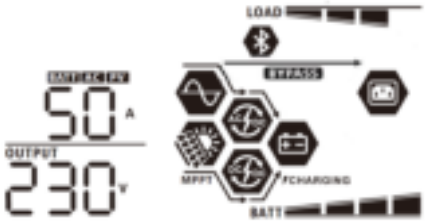 PV charging current=50A 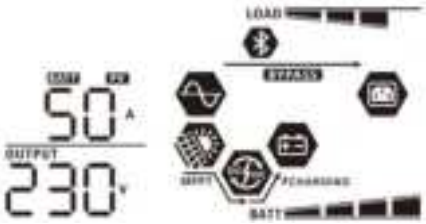 AC charging current=50A 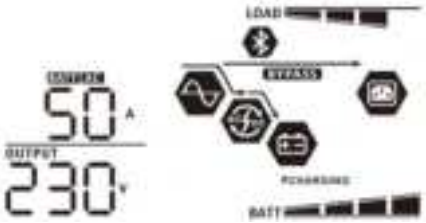
Charging power	AC and PV charging power=500W 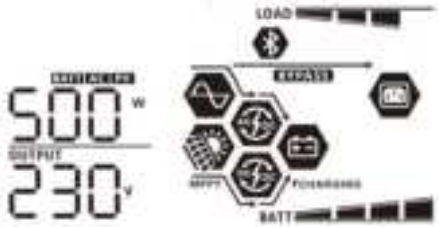 PV charging power=500W 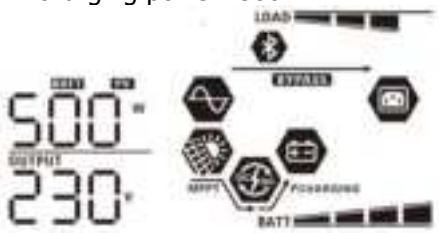 AC charging power=500W 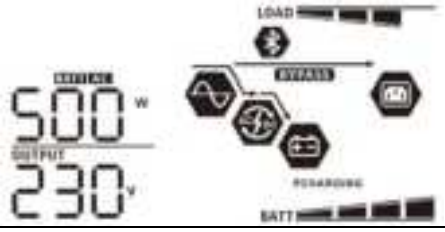
Battery voltage and output voltage	Battery voltage=25.5V, output voltage=230V

Output frequency	Output frequency=50Hz 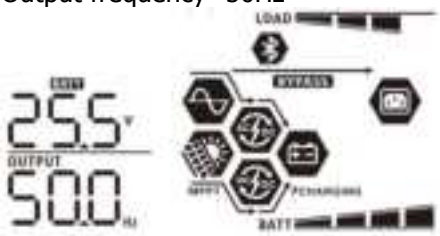
Load percentage	Load percent=70% 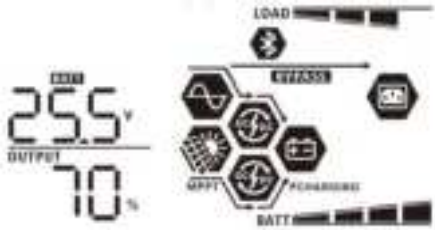
Load in VA	When connected load is lower than 1kVA, load in VA will present xxxVA like below chart. 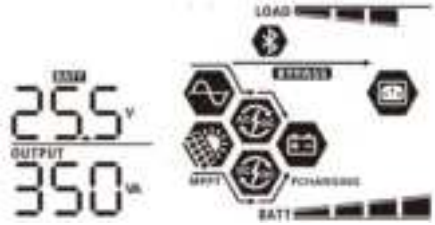 When load is larger than 1kVA (≧1KVA), load in VA will present x.xkVA like below chart.
Load in Watt	When load is lower than 1kW, load in W will present xxxW like below chart. When load is larger than 1kW (≧1KW), load in W will present x.xkW like below chart.
Battery voltage/DC discharging current	Battery voltage=25.5V, discharging current=1A 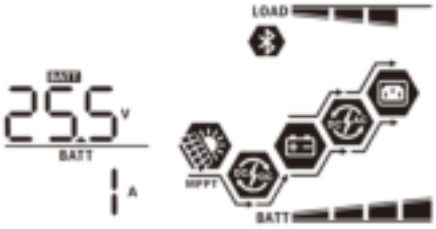

PV energy generated today and Load output energy today	This PV Today energy = 3.88kWh, Load Today energy= 9.88kWh. 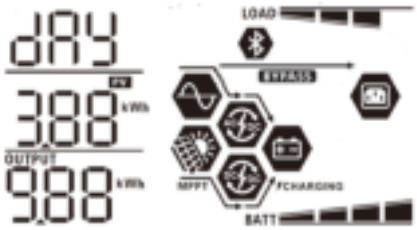
PV energy generated this month and Load output energy this month.	This PV month energy = 388kWh, Load month energy= 988kWh. 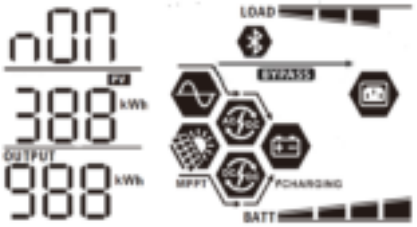
PV energy generated this year and Load output energy this year.	This PV year energy = 3.88MWh, Load year energy = 9.88MWh. 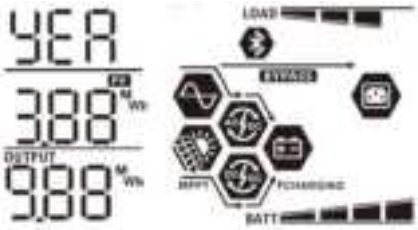
PV energy generated totally and Load output total energy.	PV Total energy = 38.8MWh, Load Output Total energy = 98.8MWh. 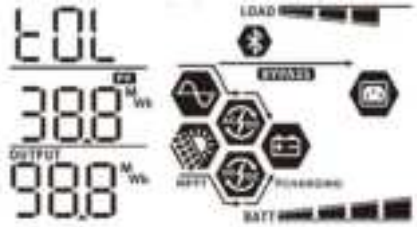
Real date.	Real date Nov 28, 2017.
Real time.	Real time 13:20. 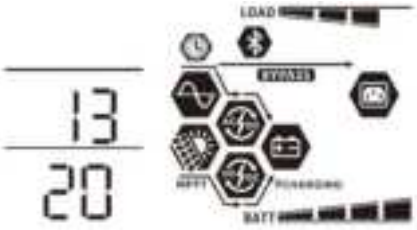

Main CPU version checking.	Main CPU version 00014.04.
Secondary CPU version checking.	Secondary CPU version 00003.03. 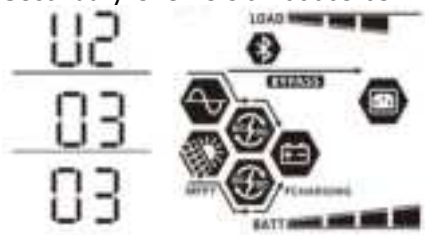
Secondary Bluetooth version checking.	Secondary Bluetooth version 00003.03.

Operating Mode Description

Operation mode	Description	LCD display
Standby mode **Note:** *Standby mode: The inverter is not turned on yet but at this time, the inverter can charge battery without AC output.	No output is supplied by the unit but it still can charge batteries.	Charging by utility and PV energy.
		Charging by utility.
		Charging by PV energy.
		No charging.
Fault mode Note: *Fault mode: Errors are caused by inside circuit error or external reasons such as over temperature, output short circuited and so on.	PV energy and utility can charge batteries.	Charging by utility and PV energy.
		Charging by utility.
		Charging by PV energy.
		No charging.

Operation mode	Description	LCD display
Line Mode	The unit will provide output power from the mains. It will also charge the battery at line mode.	Charging by utility and PV energy.
		Charging by utility. 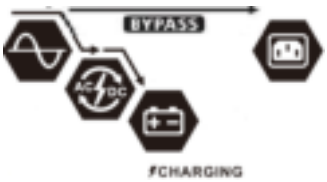
		If "SUB" (solar first) is selected as output source priority and solar energy is not sufficient to provide the load, solar energy and the utility will provide the loads and charge the battery at the same time. 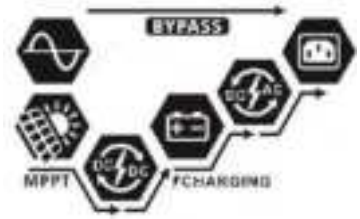
		If "SUB" (solar first) is selected as output source priority and battery is not connected, solar energy and the utility will provide the loads. 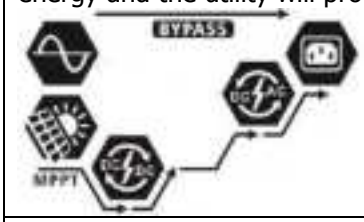
		Power from utility.

Operation mode	Description	LCD display
Battery Mode	The unit will provide output power from battery and/or PV power.	Power from battery and PV energy.
		PV energy will supply power to the loads and charge battery at the same time. No utility is available.
		Power from battery only.
		Power from PV energy only.

Battery Equalization Description

Equalization function is added into charge controller. It reverses the buildup of negative chemical effects like stratification, a condition where acid concentration is greater at the bottom of the battery than at the top. Equalization also helps to remove sulfate crystals that might have built up on the plates. If left unchecked, this condition, called sulfation, will reduce the overall capacity of the battery. Therefore, it's recommended to equalize battery periodically.

- **How to Apply Equalization Function**

You must enable battery equalization function in monitoring LCD setting program 30 first. Then, you may apply this function in device by either one of following methods:

1. Setting equalization interval in program 35.
2. Active equalization immediately in program 36.

- **When to Equalize**

In float stage, when the setting equalization interval (battery equalization cycle) is arrived, or equalization is active immediately, the controller will start to enter Equalize stage.

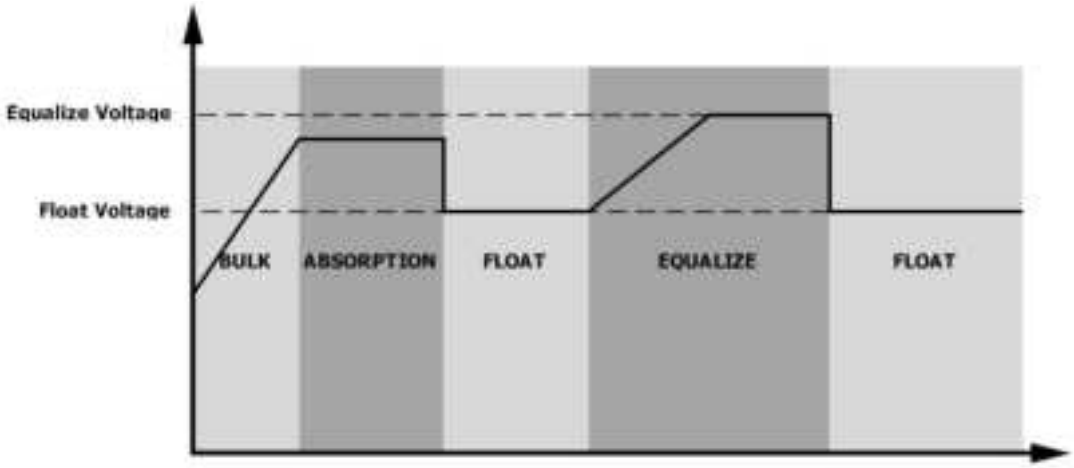

- **Equalize charging time and timeout**

In Equalize stage, the controller will supply power to charge battery as much as possible until battery voltage raises to battery equalization voltage. Then, constant-voltage regulation is applied to maintain battery voltage at the battery equalization voltage. The battery will remain in the Equalize stage until setting battery equalized time is arrived.

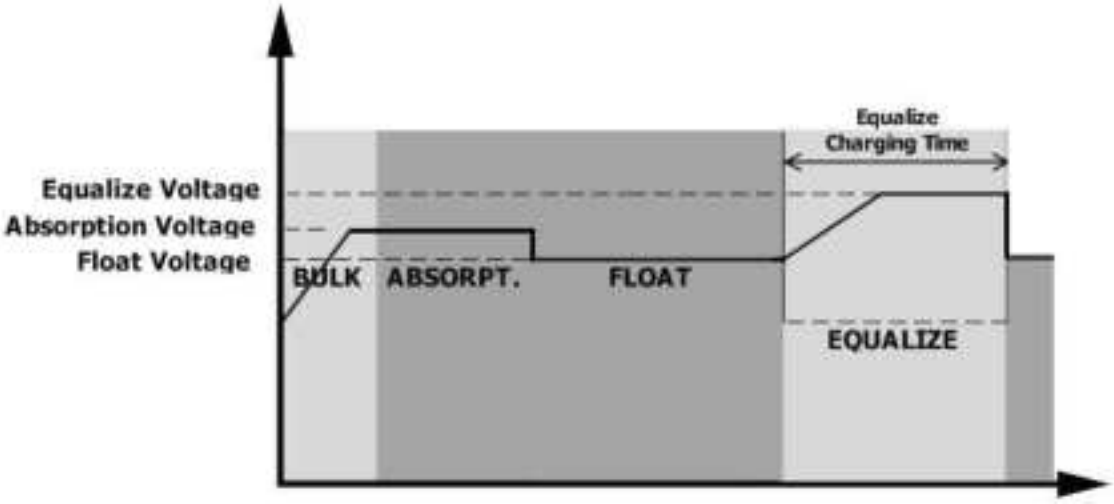

However, in Equalize stage, when battery equalized time is expired and battery voltage doesn't rise to battery equalization voltage point, the charge controller will extend the battery equalized time until battery voltage achieves battery equalization voltage. If battery voltage is still lower than battery equalization voltage when battery equalized timeout setting is over, the charge controller will stop equalization and return to float stage.

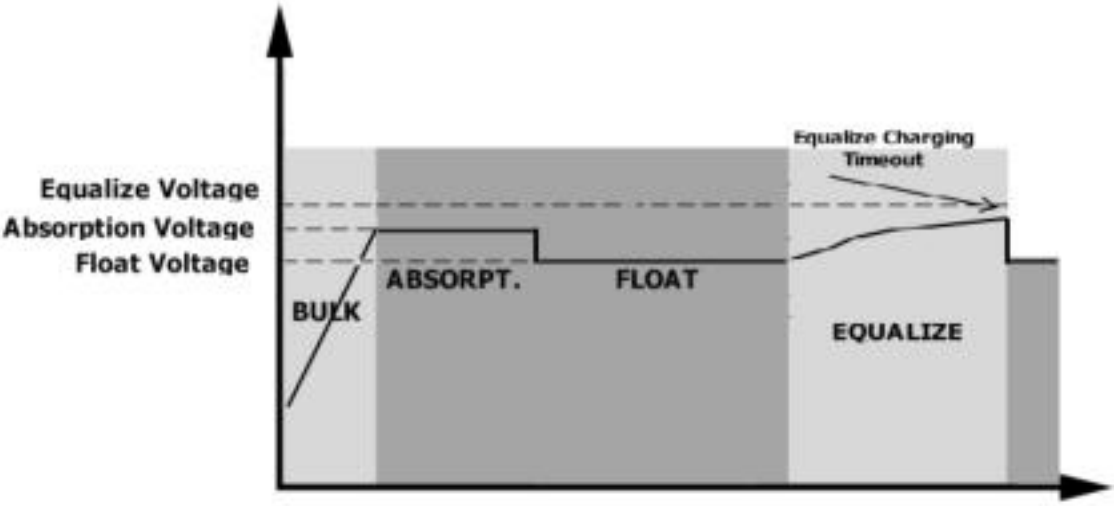

Fault Reference Code

Fault Code	Fault Event	Icon on
01	Fan is locked when inverter is off.	F01
02	Over temperature	F02
03	Battery voltage is too high	F03
04	Battery voltage is too low	F04
05	Output short circuited or over temperature is detected by internal converter components.	F05
06	Output voltage is too high.	F06
07	Overload time out	F07
08	Bus voltage is too high	F08
09	Bus soft start failed	F09
51	Over current or surge	F51
52	Bus voltage is too low	F52
53	Inverter soft start failed	F53
55	Over DC voltage in AC output	F55
57	Current sensor failed	F57
58	Output voltage is too low	F58
59	PV voltage is over limitation	F59

Warning Indicator

Warning Code	Warning Event	Audible Alarm	Icon flashing
01	Fan is locked when inverter is on.	Beep three times every second	01
02	Over temperature	None	02
03	Battery is over-charged	Beep once every second	03
04	Low battery	Beep once every second	04
07	Overload	Beep once every 0.5 second	07
10	Output power derating	Beep twice every 3 seconds	10
15	PV energy is low.	Beep twice every 3 seconds	15
16	High AC input (>280VAC) during BUS soft start	None	16
32	Communication interrupted	None	32
E9	Battery equalization	None	E9
bP	Battery is not connected	None	bP

SPECIFICATIONS

Table 1 Line Mode Specifications

INVERTER MODEL	1.5KW	3KW	5KW
Input Voltage Waveform	Sinusoidal (utility or generator)		
Nominal Input Voltage	230Vac		
Low Loss Voltage	170Vac±7V (UPS); 90Vac±7V (Appliances)		
Low Loss Return Voltage	180Vac±7V (UPS); 100Vac±7V (Appliances)		
High Loss Voltage	280Vac±7V		
High Loss Return Voltage	270Vac±7V		
Max AC Input Voltage	300Vac		
Nominal Input Frequency	50Hz / 60Hz (Auto detection)		
Low Loss Frequency	40±1Hz		
Low Loss Return Frequency	42±1Hz		
High Loss Frequency	65±1Hz		
High Loss Return Frequency	63±1Hz		
Output Short Circuit Protection	Circuit Breaker		
Efficiency (Line Mode)	>95% (Rated R load, battery full charged)		
Transfer Time	10ms typical (UPS); 20ms typical (Appliances)		
Output power derating: When AC input voltage drops to 170V, the output power will be derated.	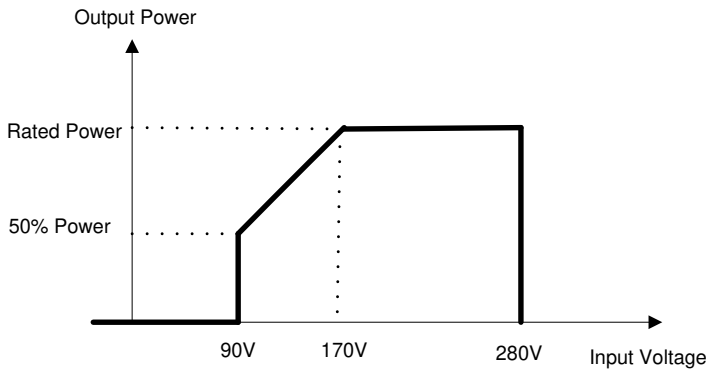		

Table 2 Inverter Mode Specifications

INVERTER MODEL	1.5KW	3KW	5KW
Rated Output Power	1.5KVA/1.5KW	3KVA/3KW	5KVA/5KW
Output Voltage Waveform	Pure Sine Wave		
Output Voltage Regulation	230Vac±5%		
Output Frequency	50Hz		
Peak Efficiency	93%		
Overload Protection	5s@≥130% load; 10s@105%~130% load		
Surge Capacity	2* rated power for 5 seconds		
Nominal DC Input Voltage	24Vdc		48Vdc
Cold Start Voltage	23.0Vdc		46.0Vdc
Low DC Warning Voltage @ load < 50% @ load ≥ 50%	 23.0Vdc 22.0Vdc		 46.0Vdc 44.0Vdc
Low DC Warning Return Voltage @ load < 50% @ load ≥ 50%	 23.5Vdc 23.0Vdc		 47.0Vdc 46.0Vdc
Low DC Cut-off Voltage @ load < 50% @ load ≥ 50%	 21.5Vdc 21.0Vdc		 43.0Vdc 42.0Vdc
High DC Recovery Voltage	32Vdc		62Vdc
High DC Cut-off Voltage	33Vdc		63Vdc
No Load Power Consumption	<35W		<50W

Table 3 Charge Mode Specifications

Utility Charging Mode				
INVERTER MODEL		**1.5KW**	**3KW**	**5KW**
Charging Algorithm		3-Step		
AC Charging Current (Max)		40Amp (@$V_{I/P}$=230Vac)	60Amp (@$V_{I/P}$=230Vac)	
Bulk Charging Voltage	**Flooded Battery**	29.2		58.4
	AGM / Gel Battery	28.2		56.4
Floating Charging Voltage		27Vdc		54Vdc
Charging Curve		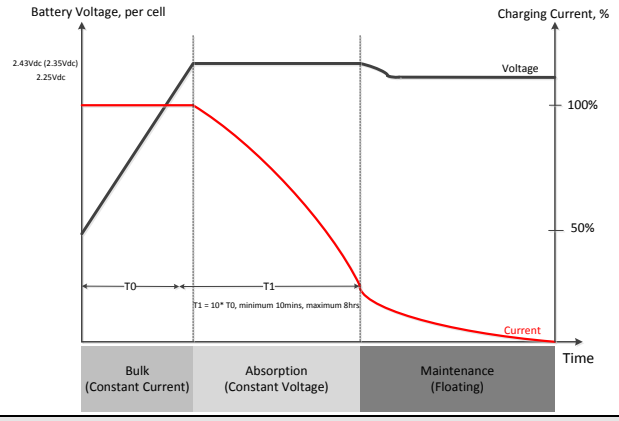		
MPPT Solar Charging Mode				
INVERTER MODEL		**1.5KW**	**3KW**	**5KW**
Max. PV Array Power		2000W	4000W	
Nominal PV Voltage		240Vdc		
Start-up Voltage		150Vdc +/- 10Vdc		
PV Array MPPT Voltage Range		120~380Vdc	120~450Vdc	
Max. PV Array Open Circuit Voltage		400Vdc	500Vdc	
Max Charging Current (AC charger plus solar charger)		60A	80Amp	

Table 4 General Specifications

INVERTER MODEL	**1.5KW**	**3KW**	**5KW**
Operating Temperature Range	-10°C to 50°C		
Storage temperature	-15°C~ 60°C		
Humidity	5% to 95% Relative Humidity (Non-condensing)		
Dimension (D*W*H), mm	100 x 280 x 390	115 x 300 x 440	
Net Weight, kg	8.5	9	10

TROUBLE SHOOTING

Problem	LCD/LED/Buzzer	Explanation / Possible cause	What to do
Unit shuts down automatically during startup process.	LCD/LEDs and buzzer will be active for 3 seconds and then complete off.	The battery voltage is too low (<1.91V/Cell)	1. Re-charge battery. 2. Replace battery.
No response after power on.	No indication.	1. The battery voltage is far too low. (<1.4V/Cell) 2. Internal fuse tripped.	1. Contact repair center for replacing the fuse. 2. Re-charge battery. 3. Replace battery.
Mains exist but the unit works in battery mode.	Input voltage is displayed as 0 on the LCD and green LED is flashing.	Input protector is tripped	Check if AC breaker is tripped and AC wiring is connected well.
	Green LED is flashing.	Insufficient quality of AC power. (Shore or Generator)	1. Check if AC wires are too thin and/or too long. 2. Check if generator (if applied) is working well or if input voltage range setting is correct. (UPS→Appliance)
	Green LED is flashing.	Set "SUB" (solar first) as the priority of output source.	Change output source priority to "USB" (utility first).
When the unit is turned on, internal relay is switched on and off repeatedly.	LCD display and LEDs are flashing	Battery is disconnected.	Check if battery wires are connected well.
Buzzer beeps continuously and red LED is on.	Fault code 07	Overload error. The inverter is overload 110% and time is up.	Reduce the connected load by switching off some equipment.
		If PV input voltage is higher than specification, the output power will be derated. At this time, if connected loads is higher than derated output power, it will cause overload.	Reduce the number of PV modules in series or the connected load.
	Fault code 05	Output short circuited.	Check if wiring is connected well and remove abnormal load.
		Temperature of internal converter component is over 120°C.	Check whether the air flow of the unit is blocked or whether the ambient temperature is too high.
	Fault code 02	Internal temperature of inverter component is over 100°C.	
	Fault code 03	Battery is over-charged.	Return to repair center.
		The battery voltage is too high.	Check if spec and quantity of batteries are meet requirements.
	Fault code 01	Fan fault	Replace the fan.
	Fault code 06/58	Output abnormal (Inverter voltage below than 190Vac or is higher than 260Vac)	1. Reduce the connected load. 2. Return to repair center
	Fault code 08/09/53/57	Internal components failed.	Return to repair center.
	Fault code 51	Over current or surge.	Restart the unit, if the error happens again, please return to repair center.
	Fault code 52	Bus voltage is too low.	
	Fault code 55	Output voltage is unbalanced.	
	Fault code 59	PV input voltage is beyond the specification.	Reduce the number of PV modules in series.

Appendix: Approximate Back-up Time Table

Model	Load (VA)	Backup Time @ 24Vdc 100Ah (min)	Backup Time @ 24Vdc 200Ah (min)
1.5KW	150	908	2224
	300	449	1100
	450	338	815
	600	222	525
	750	177	414
	900	124	303
	1050	110	269
	1200	95	227
	1350	82	198
	1500	68	164

Model	Load (VA)	Backup Time @ 24Vdc 100Ah (min)	Backup Time @ 24Vdc 200Ah (min)
3KW	300	449	1100
	600	222	525
	900	124	303
	1200	95	227
	1500	68	164
	1800	56	126
	2100	48	108
	2400	35	94
	2700	31	74
	3000	28	67

Model	Load (VA)	Backup Time @ 48Vdc 100Ah (min)	Backup Time @ 48Vdc 200Ah (min)
5KW	500	613	1288
	1000	268	613
	1500	158	402
	2000	111	271
	2500	90	215
	3000	76	182
	3500	65	141
	4000	50	112
	4500	44	100
	5000	40	90

Note: Backup time depends on the quality of the battery, age of battery and type of battery.
Specifications of batteries may vary depending on different manufacturers.