Installation and service instructions

for contractors

Vitodens 100-W
Type B1GA, 3.2 to 32 kW
Wall mounted gas condensing boiler
Natural gas and LPG version
Gas Council No.
B1GA: 41-819-56

VITODENS 100-W

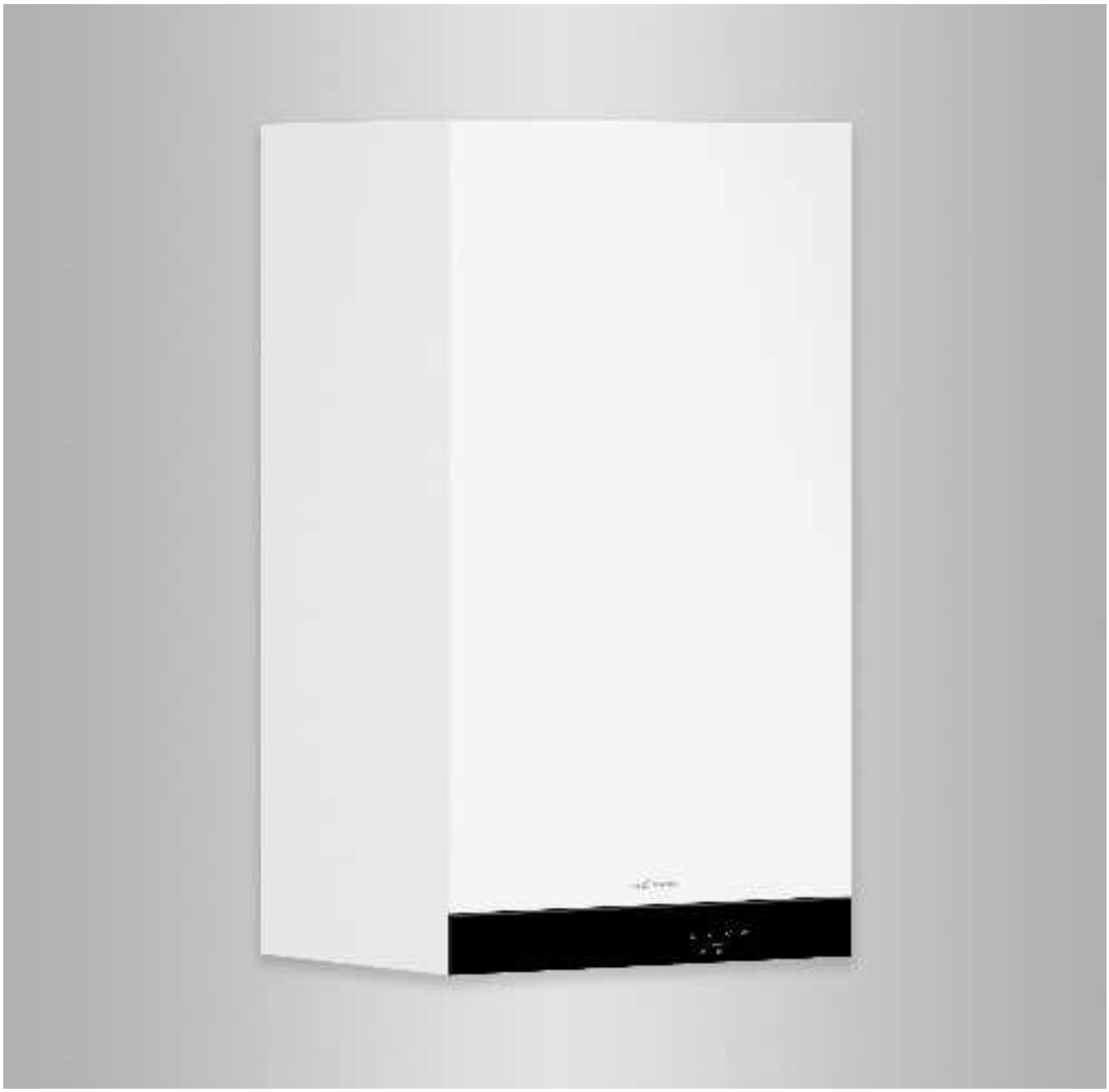

6194585 GB 3/2022

Please keep safe.

Safety instructions

⚠ Please follow these safety instructions closely to prevent accidents and material losses.

Safety instructions explained

⚠ **Danger**
This symbol warns against the risk of injury.

! **Please note**
This symbol warns against the risk of material losses and environmental pollution.

Note
Details identified by the word "Note" contain additional information.

Target group

These instructions are exclusively intended for qualified contractors.

- Work on gas installations must only be carried out by a registered gas fitter.
- Work on electrical equipment must only be carried out by a qualified electrician.
- The system must be commissioned by the system installer or a qualified person authorised by the installer.

Regulations to be observed

- National installation regulations
- Statutory regulations for the prevention of accidents
- Statutory regulations for environmental protection
- Codes of practice of the relevant trade associations
- Relevant country-specific safety regulations

Safety instructions for working on the system

Working on the system

- Where gas is used as the fuel, close the main gas shut-off valve and safeguard it against unintentional reopening.
- Isolate the system from the power supply, e.g. by removing the separate fuse or by means of a mains isolator, and check that it is no longer 'live'.
- Safeguard the system against reconnection.
- Wear suitable personal protective equipment when carrying out any work.

6194585

Safety instructions (cont.)

⚠ **Danger**
Hot surfaces and fluids can result in burns or scalding.
- Before maintenance and service work, switch OFF the appliance and let it cool down.
- Never touch hot surfaces on the boiler, burner, flue system or pipework.

! **Please note**
Electronic assemblies can be damaged by electrostatic discharge.
Prior to commencing work, touch earthed objects such as heating or water pipes to discharge static loads.

Repair work

! **Please note**
Repairing components that fulfil a safety function can compromise the safe operation of the system.
Replace faulty components only with genuine Viessmann spare parts.

Auxiliary components, spare and wearing parts

! **Please note**
Spare and wearing parts that have not been tested together with the system can compromise its function. Installing non-authorised components and making non-approved modifications or conversions can compromise safety and may invalidate our warranty.
For replacements, use only original spare parts supplied or approved by Viessmann.

Safety instructions (cont.)

Safety instructions for operating the system

If you smell gas

Danger
Escaping gas can lead to explosions which may result in serious injury.
- Do not smoke. Prevent naked flames and sparks. Never switch lights or electrical appliances on or off.
- Close the gas shut-off valve.
- Open windows and doors.
- Evacuate any people from the danger zone.
- Notify your gas or electricity supply utility from outside the building.
- Have the power supply to the building shut off from a safe place (outside the building).

If you smell flue gas

Danger
Flue gas can lead to life threatening poisoning.
- Shut down the heating system.
- Ventilate the installation site.
- Close doors to living spaces to prevent flue gases from spreading.

What to do if water escapes from the appliance

Danger
When water escapes from the appliance there is a risk of electrocution.
Switch off the heating system at the external isolator (e.g. fuse box, domestic power distribution).

Danger
If water escapes from the appliance, there is a risk of scalding.
Never touch hot heating water.

Condensate

Danger
Contact with condensate can be harmful to health.
Never let condensate touch your skin or eyes and do not swallow it.

Flue systems and combustion air

Ensure that flue systems are clear and cannot be sealed, for instance due to accumulation of condensate or other external causes.
Ensure an adequate supply of combustion air.
Instruct system users that subsequent modifications to the building characteristics are not permissible (e.g. cable/pipework routing, cladding or partitions).

Danger
Leaking or blocked flue systems, or an inadequate supply of combustion air can cause life threatening poisoning from carbon monoxide in the flue gas.
Ensure the flue system is in good working order. Vents for supplying combustion air must be non-closable.

Extractors

Operating appliances that extract air to the outside (extractor hoods, extractors, air conditioning units, central vacuum cleaning systems, etc.) can create negative pressure. If the boiler is operated at the same time, this can lead to a reverse flow of flue gas.

Safety instructions (cont.)

⚠ **Danger**
The simultaneous operation of the boiler and appliances that extract air to the outside can result in life threatening poisoning due to reverse flow of the flue gas.
Fit an interlock circuit or take suitable steps to ensure an adequate supply of combustion air.

Index

1. Information

Key to date of manufacture 8
Disposal of packaging 8
Gas Council No. 8
Symbols 9
Intended use 9
Product information 10
- Vitodens 100-W, type B1GA 10

System examples 10
Maintenance parts and spare parts 10
- Viessmann Partnershop 11
- Viessmann spare part app 11

2. Preparing for installation

Dimensions and connections 12
- 11 to 25 kW 12
- 32 kW 14

Removing the boiler from the packaging 16
Fitting the wall mounting bracket 16

3. Installation sequence

Removing the front panel 18
Preparing the connections 18
Fitting the boiler to the wall mounting bracket 19
Connections on the heating water side 20
- Y-plan system 21

Condensate connection 21
- Filling the trap with water 22

Flue gas connection 22
Gas connection 22
Electrical connections 23
- Opening the wiring chamber 23
- Layout of the electrical connections 24
- On-site connections on the HBMU heat management unit 25
- Outside temperature sensor 25
- Power supply 40 25
- Routing connecting cables/leads 26
- Closing the wiring chamber 26

Fitting the front panel 27

4. Commissioning, inspection, maintenance

Steps - commissioning, inspection and maintenance 28

5. System configuration (parameters)

Calling up parameters 44
Parameter 44
- Energy saving functions (setting only via software tool) 45

6. Diagnosis and service checks

Service menu 47
- Calling up the service menu 47
- Exiting the service menu 47

Diagnosis 47
- Checking operating data 47

7. Troubleshooting

Fault display on the programming unit 49
Resetting the burner 49
Overview of electronics modules 50
Fault messages 50
Repairs 65
- Shutting down the boiler 65
- Removing the boiler from the pre-plumbing jig 66
- Checking the temperature sensors 67
- Information on replacing the HBMU heat management unit 69
- Replacing the power cable 69

6194585

Index (cont.)

		■ Replacing the HMI connecting cable	69
		■ Checking the fuse	69
8.	**Function description**	Appliance functions	70
		■ Heating mode	70
		■ Heating curve	70
		External heating circuit hook-up (if installed)	71
9.	**Connection and wiring diagram**	HBMU heat management unit	72
10.	**Commissioning/service reports**		75
11.	**Specification**	Gas condensing boiler	76
		Electronic combustion control unit	79
12.	**Disposal**	Final decommissioning and disposal	80
13.	**Certificates**	Declaration of conformity	81
14.	**Keyword index**		82

6194585

Key to date of manufacture

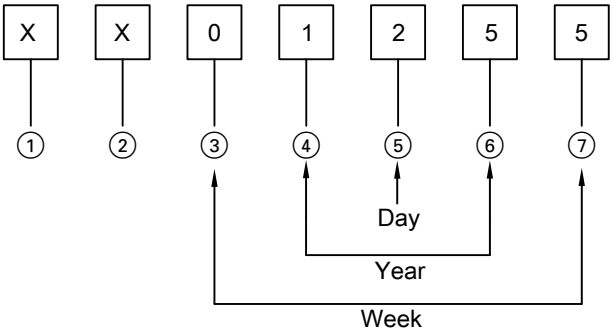

Fig. 1

Digits ① and ② Internal Viessmann information
Digits ③ and ⑦ 0 and 5 = calendar week 05 = 5th calendar week
Digits ④ and ⑥ 1 and 5 = year 20**15**
Digit ⑤ 2 = 2nd day of the working week
(Monday = 1, Tuesday = 2, etc.)
Example 0501255 corresponds to date of manufacture: 27 January 2015

Disposal of packaging

Please dispose of packaging waste in line with statutory regulations.

Gas Council No.

Type	Gas Council No.:
Vitodens 100-W, B1GA, 32 kW	**41-819-56**

6194585

Symbols

Symbol	Meaning
	Reference to other document containing further information
1.	Step in a diagram: The numbers correspond to the order in which the steps are carried out.
!	Warning of material losses and environmental pollution
	Live electrical area
	Pay particular attention.
	▪ Component must audibly click into place. or ▪ Acoustic signal
	▪ Fit new component. or ▪ In conjunction with a tool: Clean the surface.
	Dispose of component correctly.
	Dispose of component at a suitable collection point. Do **not** dispose of component in domestic waste.

The steps in connection with commissioning, inspection and maintenance are found in the "Commissioning, inspection and maintenance" section and identified as follows:

Symbol	Meaning
	Steps required during commissioning
	Not required during commissioning
	Steps required during inspection
	Not required during inspection
	Steps required during maintenance
	Not required during maintenance

Intended use

The appliance is intended solely for installation and operation in open vented and sealed unvented heating systems that comply with EN 12828 (as well as CN: CECS215-2017 and CE: CS215-2017), with due attention paid to the associated installation, service and operating instructions. It is only designed for heating up heating water that is of potable water quality.

Intended use presupposes that a fixed installation in conjunction with permissible, system-specific components has been carried out.

Commercial or industrial usage for a purpose other than heating the building or DHW shall be deemed inappropriate.

Any usage beyond this must be approved by the manufacturer in each individual case.

Incorrect usage or operation of the appliance (e.g. the appliance being opened by the system user) is prohibited and will result in an exclusion of liability. Incorrect usage also occurs if the components in the heating system are modified from their intended use (e.g. if the flue gas and ventilation air paths are sealed).

Product information

Vitodens 100-W, type B1GA

Wall mounted gas condensing boiler with Inox-Radial heat exchanger and the following integrated components:

- Modulating MatriX-Plus burner for natural gas and LPG
- Weather-compensated or constant temperature control unit

The selected gas category in the delivered condition and the associated nominal gas pressure are given on the boiler type plate. The type plate also shows the other gas types and pressures with which the boiler can be operated. A conversion within the stated natural gas groups is not required.
For conversion to LPG (without conversion kit), see "Commissioning, inspection and maintenance", page

Type plate

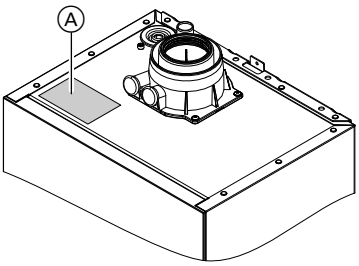

Fig. 2

Ⓐ Type plate with access code for appliance registration

The type plate of the heat generator contains extensive product information and an appliance-specific **access code with the marking "i"** for direct access to product-specific information and product registration on the internet.
The access code contains the credentials for the registration and product information portal, and the 16-digit serial number.

Note
A further label with the access code is enclosed with the heat generator.
Stick the label in the installation and service instructions so it can be easily found again for later use.

The Vitodens boiler may generally only be delivered to countries listed on the type plate. For deliveries to other countries, approved contractors must arrange individual approval on their own initiative and in accordance with the law of the country in question.

System examples

System examples with hydraulic and electrical connection diagrams and function descriptions are available to help setting up the heating system.

Detailed information on system examples can be found at: **www.viessmann-schemes.com**

Maintenance parts and spare parts

Maintenance parts and spare parts can be identified and ordered directly online.

Maintenance parts and spare parts (cont.)

Viessmann Partnershop

Login:
https://shop.viessmann.com/

Viessmann spare part app

www.viessmann.com/etapp

Dimensions and connections

11 to 25 kW

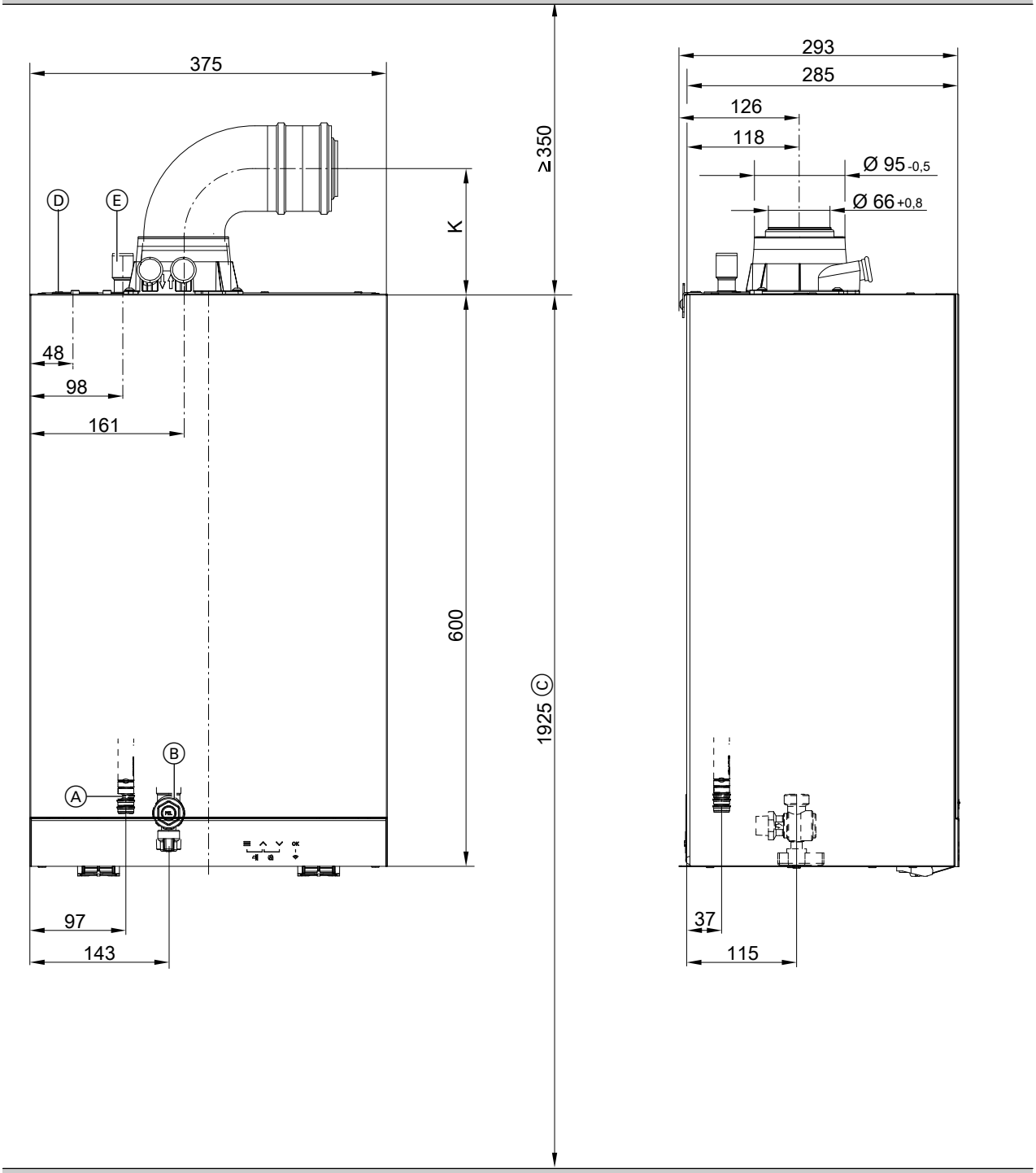

Fig. 3

Ⓐ Condensate drain
Ⓑ Gas connection
Ⓒ Dimension for siting with DHW cylinder below the boiler
Ⓓ Heating flow
Ⓔ Heating return
Ⓚ
- Dimension: 161 mm - for external wall connection
  Part no.: 7441467, 7411961
- Dimension: 131 mm - for external wall connection
  Part no.: 7946886 (with reduced flue gas bend)

6194585

Dimensions and connections (cont.)

Note
This boiler (IP rating: IP X4) is approved for installation in wet rooms inside safety zone 1, to DIN VDE 0100.
Exposure to jets of water must be prevented.
For open flue operation, the boiler may only be operated with a splash cover.
Observe the requirements of DIN VDE 0100.

Dimensions and connections (cont.)

32 kW

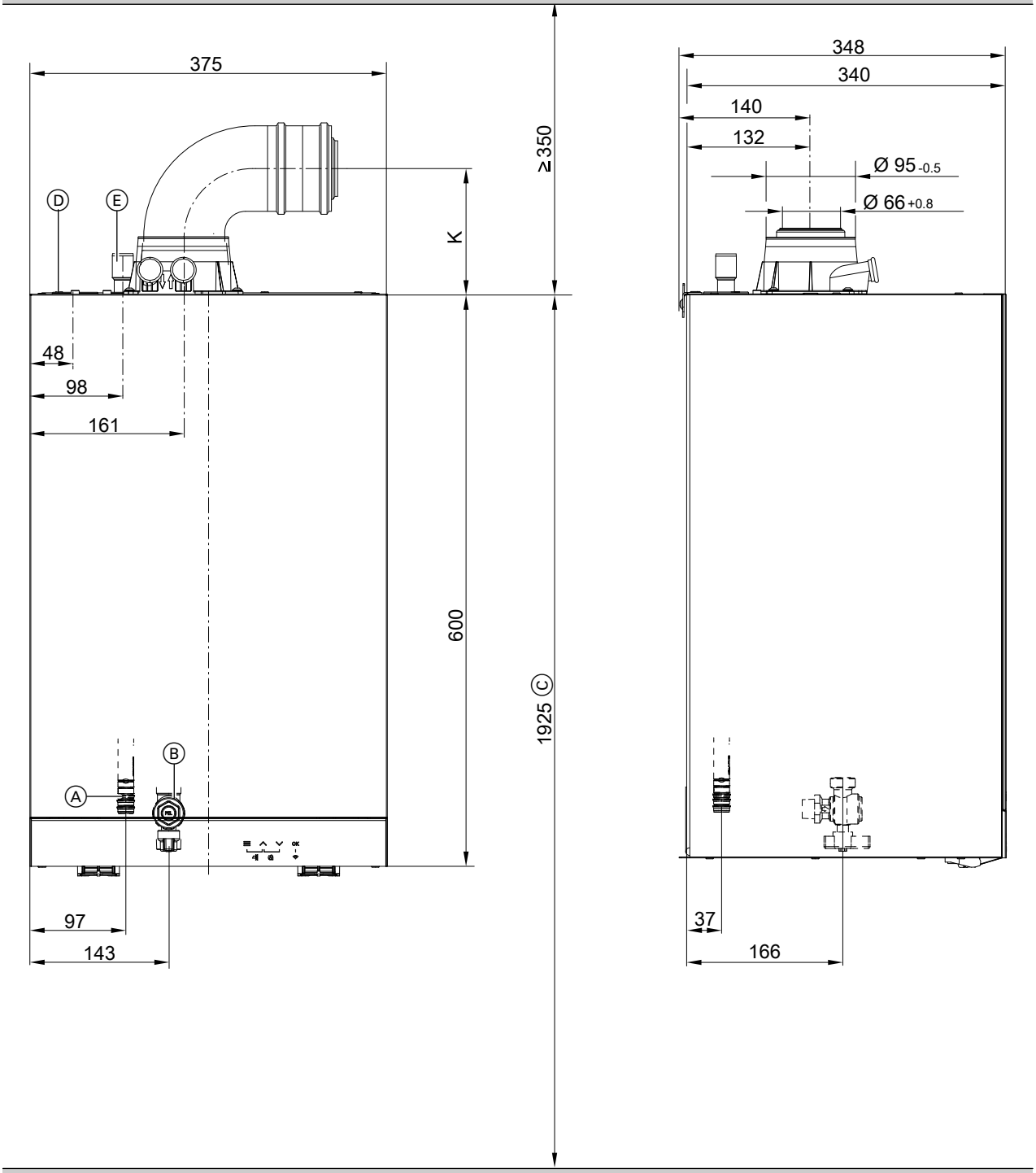

Fig. 4

Ⓐ Condensate drain
Ⓑ Gas connection
Ⓒ Dimension for siting with DHW cylinder below the boiler
Ⓓ Heating flow
Ⓔ Heating return
Ⓚ
- Dimension: 161 mm - for external wall connection
  Part no.: 7441467, 7411961
- Dimension: 131 mm - for external wall connection
  Part no.: 7946886 (with reduced flue gas bend)

6194585

Dimensions and connections (cont.)

Note
This boiler (IP rating: IP X4) is approved for installation in wet rooms inside safety zone 1, to DIN VDE 0100.
Exposure to jets of water must be prevented.
For open flue operation, the boiler may only be operated with a splash cover.
Observe the requirements of DIN VDE 0100.

Removing the boiler from the packaging

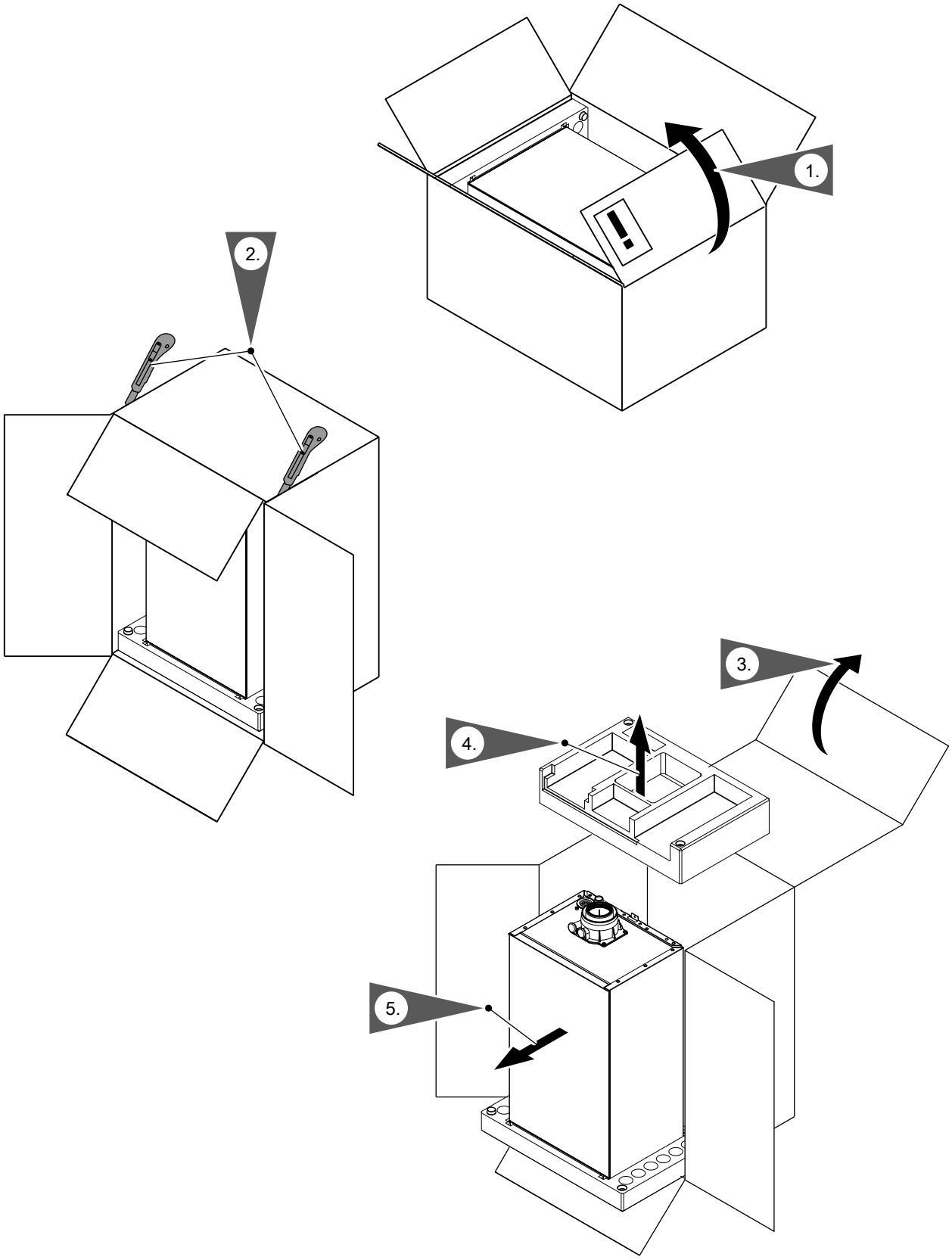

Fig. 5

Fitting the wall mounting bracket

Installation template

1. Position the supplied installation template on the wall.

6194585

Fitting the wall mounting bracket (cont.)

2. Mark out the rawl plug holes.

3. Drill ∅ 10 mm holes and insert the rawl plugs supplied.
   The rawl plugs are suitable for the following materials:
   - Concrete
   - Vertically perforated bricks
   - Hollow concrete breeze blocks
   - Hollow brick and concrete ceilings
   - Perforated sand lime bricks
   - Solid sand lime bricks
   - Natural stone with dense structure
   - Porous concrete
   - Solid gypsum panels
   - Solid concrete breeze blocks
   - Solid bricks

4. Fit the wall mounting bracket with the screws supplied.

Removing the front panel

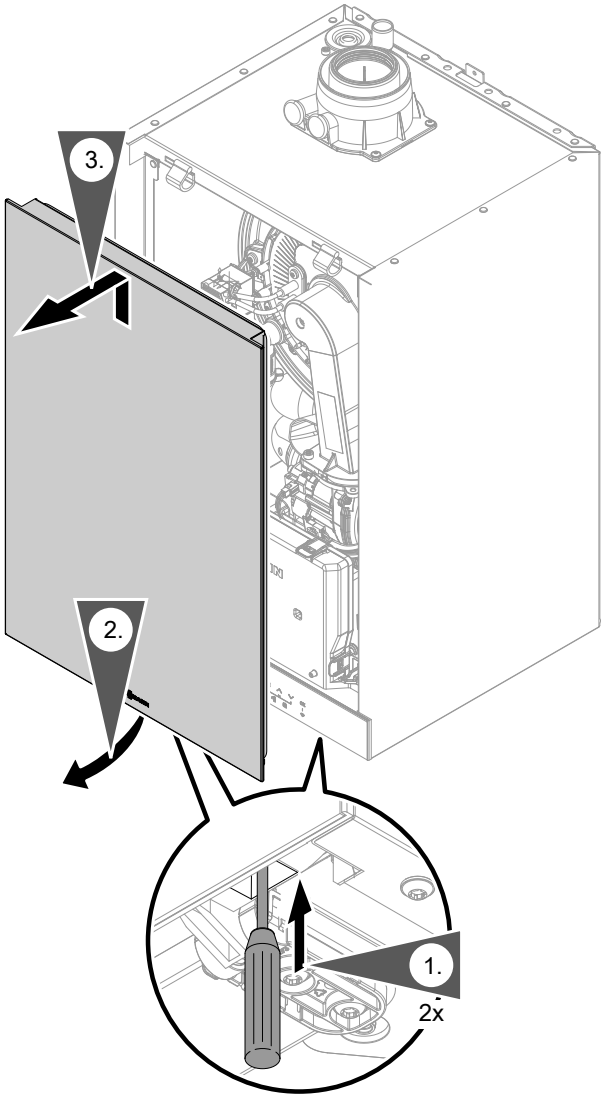

Fig. 6

1. Unlock the front panel on the underside (push in), using a screwdriver or similar tool.
2. Swivel the front panel forward slightly. Lift away upwards.

Preparing the connections

! **Please note**
To prevent damage to the appliance, connect all pipework so that it is free of load and torque stress.

1. Thoroughly flush the heating system.
2. Prepare the gas connection according to TRGI or TRF [or local regulations].
3. Prepare the electrical connections.
   - The appliance is delivered fitted with a power cable (approx. 2 m long).
     Note
     Connect the power cable to the electricity supply using a fixed connection.
   - Power supply: 230 V, 50 Hz, fuse rating max. 16 A
   - Accessory cables: 0.75 mm^2 flexible PVC cable with required number of cores for external connections
     Accessory cables: 1.5 mm^2 flexible PVC cable with required number of cores for external connections

Fitting the boiler to the wall mounting bracket

Note
Various installation components can be found in a separate pack. Keep the installation components safe, as they will be required for later installation.

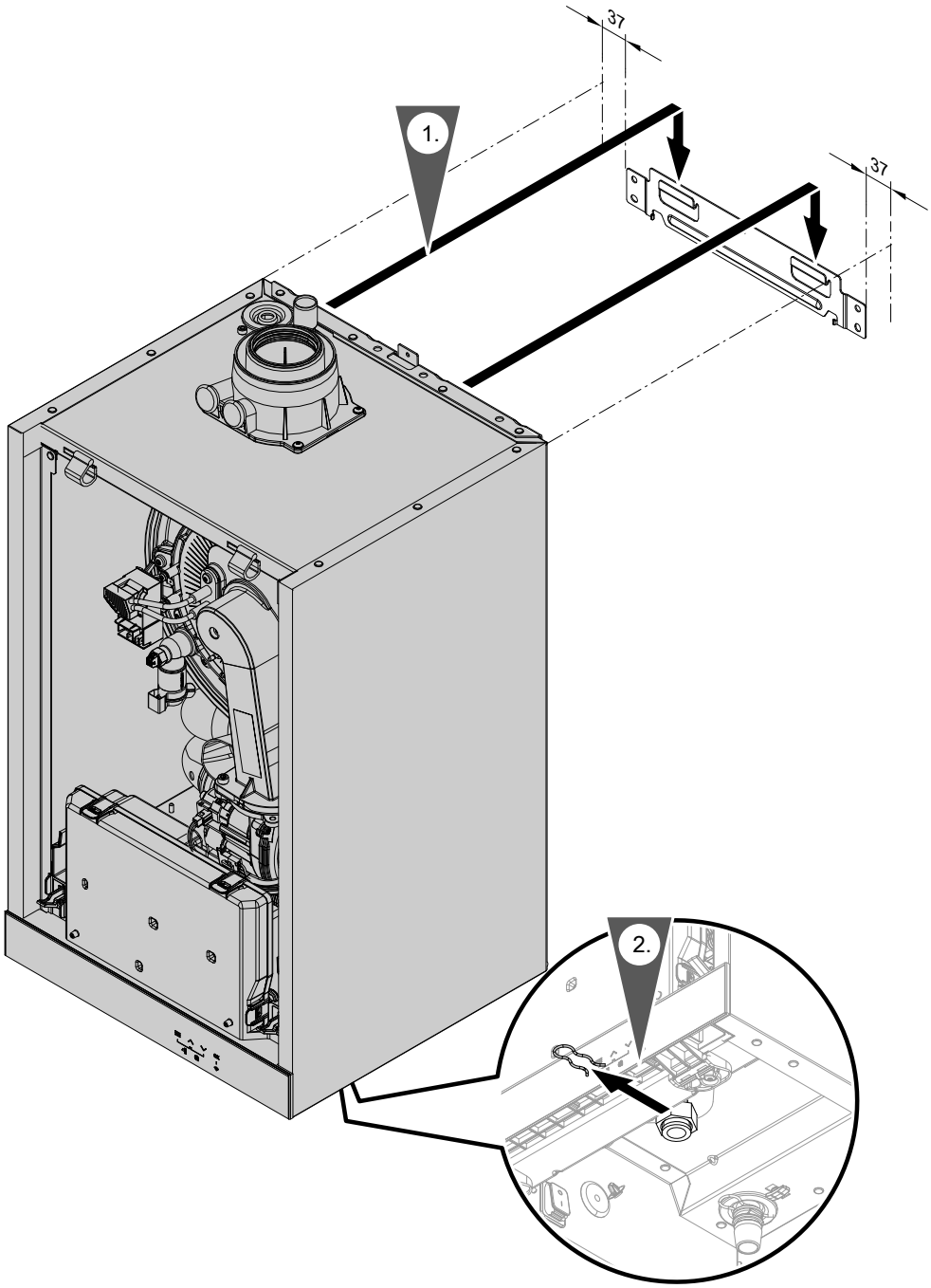

Fig. 7

1. Replace gaskets.
Internal diameter of gaskets:
Gas connection Ø 18.5 mm

Note
Gasket for gas connection is attached to the gas shut-off valve.

2. Suspend the Vitodens from the wall mounting bracket.

Note
After mounting, ensure correct seating.

3. ***Note***
Only remove the locking clip under the gas pipe union nut once the appliance has been installed. Clip is no longer required.

Fitting the boiler to the wall mounting bracket (cont.)

4. Tighten union nuts so that they form a tight seal. Tighten the union nuts as tightly as necessary and ensure that the components are undamaged and are functioning correctly throughout service life. Observe torque settings if a torque wrench is available.
   Check for gas tightness to BSI 6891.
   Union nuts G ¾: 30 Nm
   When carrying out any work on gas connection fittings, hold with a suitable tool. Never transfer any forces to the internal components.

5. Tighten locking ring fittings so that they form a tight seal:
   1 turn beyond finger-tight

Connections on the heating water side

If the connections have not been fitted previously, make the connections on the heating water side.

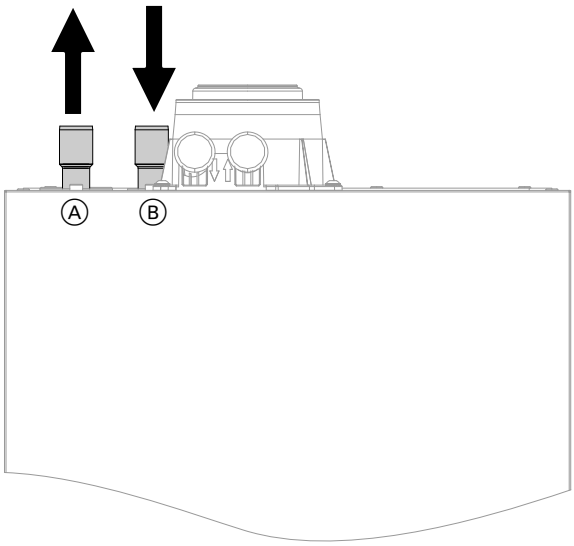

Fig. 8

Ⓐ Heating flow Ø 22 mm (male thread)
Ⓑ Heating return Ø 22 mm (male thread)

Connections on the heating water side (cont.)

Y-plan system

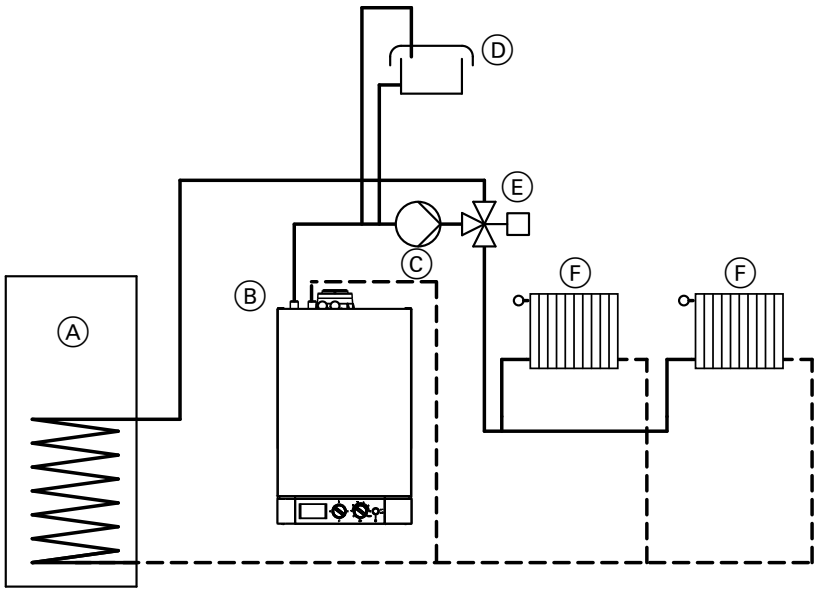

Fig. 9

Ⓐ Cylinder
Ⓑ Vitodens 100-W
Ⓒ Circulation pump
Ⓓ Feed and expansion tank
Ⓔ 3-way diverter valve
Ⓕ Radiators

Condensate connection

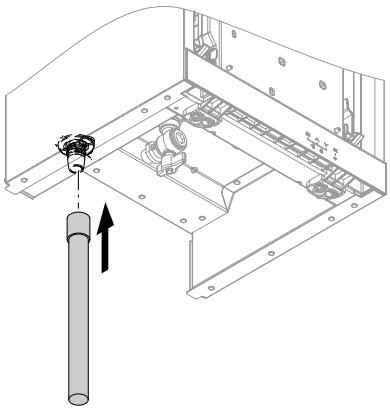

Fig. 10

1. Push the supplied drain hose on to the drain connector.

2. Connect the drain hose with a constant fall and a pipe vent to the drain network or a neutralising system.

   Note
   Route the onward drain line inside the building as far as possible.

   If the onward drain line is routed outside the building:
   - *Use a min. Ø 30 mm line.*
   - *Protect the line from frost.*
   - *Keep the line as short as possible.*

   ! **Please note**
   The drain hose is used to route away any hot water discharged from the safety valve. Lay and secure the drain hose in a way that prevents any risk of scalding.

   Note
   Observe local waste water regulations.

Condensate connection (cont.)

Filling the trap with water

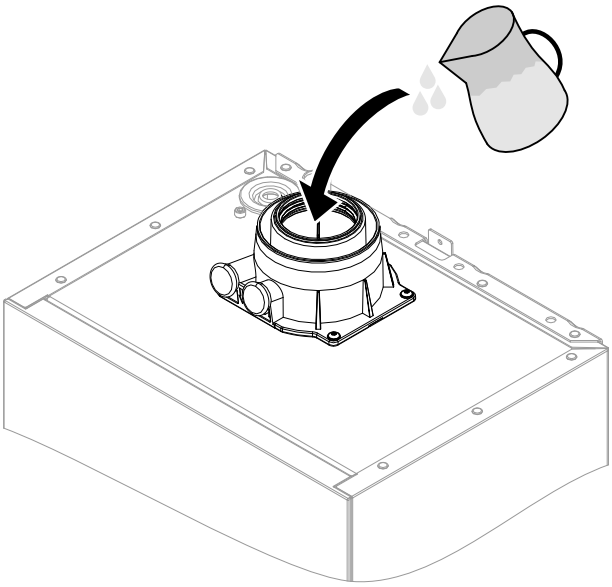

Fig. 11

Pour at least 0.3 l of water into the flue gas connection.

! **Please note**
During commissioning, flue gas may escape from the condensate drain.
Always fill the trap with water before commissioning.

Note
If there is a risk of frost, only fill the trap just before commissioning.

Flue gas connection

Note
The labels "System certificate" and "Skoberne GmbH or Groppalli flue system" enclosed with the technical documentation may only be used in conjunction with the Viessmann flue system made by Skoberne or Groppalli.

Connecting the balanced flue pipe
Flue system installation instructions

Gas connection

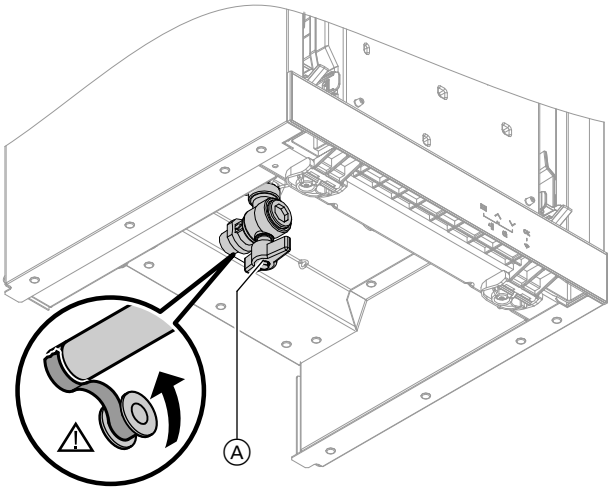

Fig. 12

1. If the gas connection has not been fitted previously, seal gas shut-off valve Ⓐ to the gas connection.
   When carrying out any work on gas connection fittings, hold with a suitable tool. Never transfer any forces to the internal components.

Gas connection (cont.)

2. Check for leaks.

Danger
Escaping gas leads to a risk of explosion.
Check all connections on the gas side (also inside the appliance) for tightness.

Note
Only use suitable and approved leak detection agents (EN 14291) and devices for the leak test. Leak detection agents with unsuitable constituents (e.g. nitrides, sulphides) can cause material damage.
Remove residues of the leak detection agent after testing.

Please note
Excessive test pressure will damage the boiler and gas solenoid valve.
Max. test pressure 150 mbar (15 kPa). If a higher pressure is required for leak detection, disconnect the boiler and the gas solenoid valve from the main supply pipe (undo the fitting).

3. Purge the gas line.

Note
Operation with LPG:
Install an external safety solenoid valve if the boiler is installed below ground level. An EM-EA1 extension (accessories) is required to connect the safety solenoid valve.

Electrical connections

Opening the wiring chamber

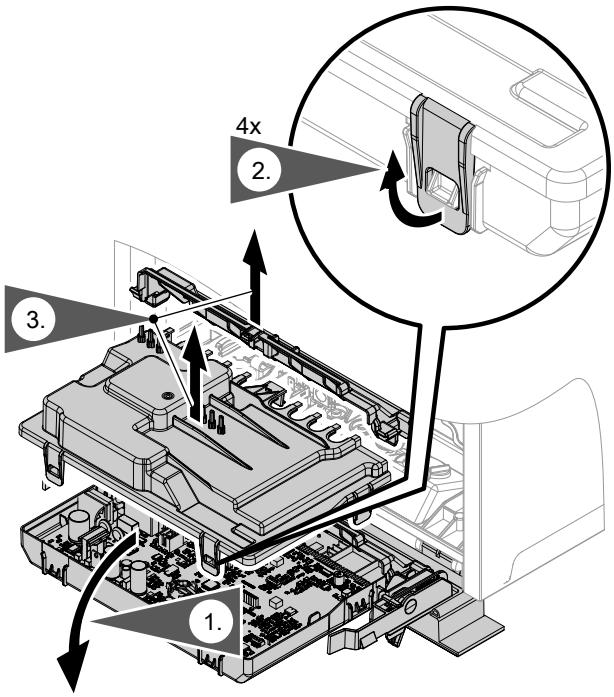

Fig. 13

Please note
Electronic assemblies can be damaged by electrostatic discharge.
Before beginning work, touch an earthed object, e.g. a heating or water pipe, to discharge any static.

Electrical connections (cont.)

Layout of the electrical connections

Note
For further information on the connections, see the following chapters.

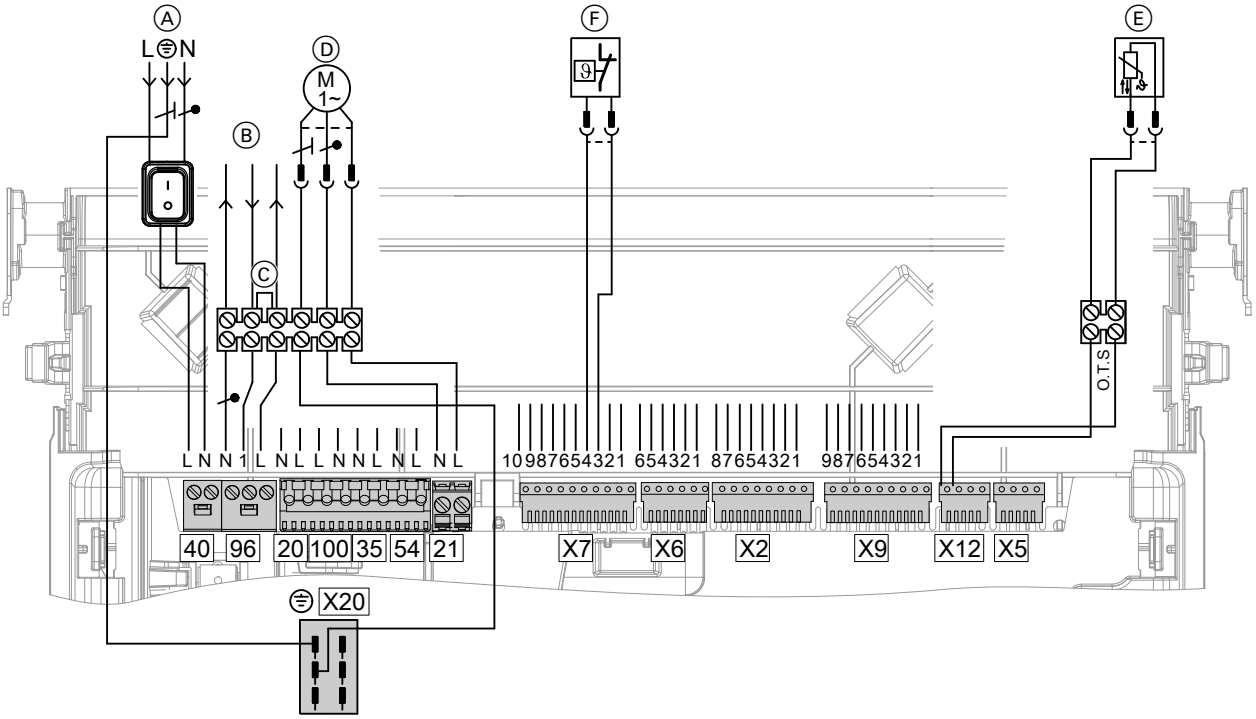

Fig. 14

Connections to 230 V~ plugs

- Ⓐ Power supply 40
- Ⓑ Configurable floating input 96, 230 V
  230 V output
  230 V room thermostat connection
- 100 Fan motor
- 35 Gas solenoid valve
- 54 Ignition unit/ionisation
- 21 Circulation pump
- Ⓒ Remove jumper when connecting an accessory
- Ⓓ Connection for external circulation pump
- Ⓔ Outside temperature sensor
- Ⓕ Cylinder demand junction box
- X20 Equipotential bonding (earth conductor)

Note on connecting accessories
When connecting accessories observe the separate installation instructions provided with them.

Electrical connections (cont.)

On-site connections on the HBMU heat management unit

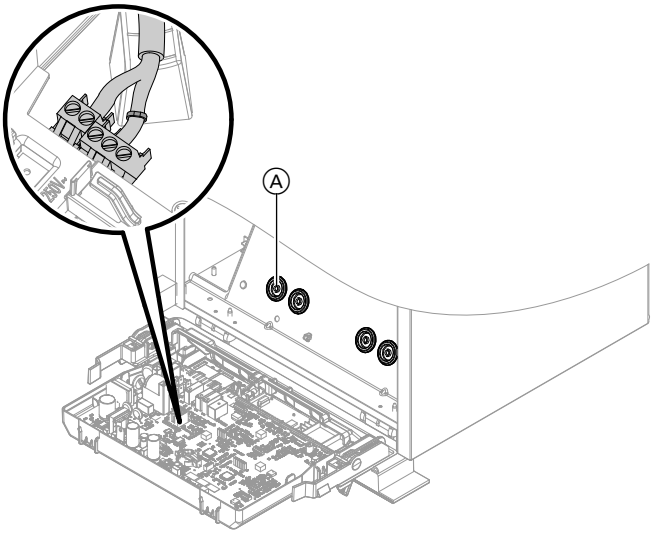

Fig. 15

Ⓐ Diaphragm grommets for cables

- Open diaphragm grommets as required. Thread through only one cable at a time without a plug. Ensure diaphragm grommets are airtight. If required, remove plug from cable. After threading the cable through, refit the plug with wire ferrules.
- For cables without strain relief bushings, provide strain relief in the wiring chamber in the form of cable ties.

Outside temperature sensor

Fitting location for outside temperature sensor

- North or north-westerly wall, 2 to 2.5 m above ground level; in multi storey buildings, in the upper half of the second floor
- Not above windows, doors or vents
- Not immediately below balconies or gutters
- Never render over.

Outside temperature sensor connection

See chapter "Connection and wiring diagram".
2-core lead, up to 35 m long with 1.5 mm^2 cross-section

Power supply 40

Danger
Incorrectly executed electrical installations can result in injuries from electrical current and damage to the appliance.

Connect the power supply and implement all safety measures (e.g. RCD circuit) in accordance with the following regulations:
- IEC 60364-4-41
- IEEE Wiring Regulation; BS 7671:2018
- Connection conditions of the local grid operator

- Install an isolator in the power cable to provide omnipolar separation from the mains for all active conductors, corresponding to overvoltage category III (3 mm) for complete isolation. The isolator must be fitted in the permanent electrical installation, in line with installation requirements.
  We also recommend installing a pulse current-sensitive RCD (RCD class A).
- Connect the power cable to the electricity supply using a fixed connection.
- If the power supply to the appliance is connected with a flexible power cable, ensure that the live conductors are pulled taut before the earth conductor in the event of strain relief failure. The length of the earth conductor wire will depend on the design.
- Max. fuse rating 16 A.

Electrical connections (cont.)

Danger
The absence of system component earthing can lead to serious injury from electric current if an electrical fault occurs.
The appliance and pipework must be connected to the equipotential bonding of the building.

Routing connecting cables/leads

Please note
If closures or diaphragm grommets are damaged, splashproofing is no longer ensured.
Do not open or damage closures or unused diaphragm grommets on the underside of the appliance. Seal cable entries with fitted diaphragm grommets.

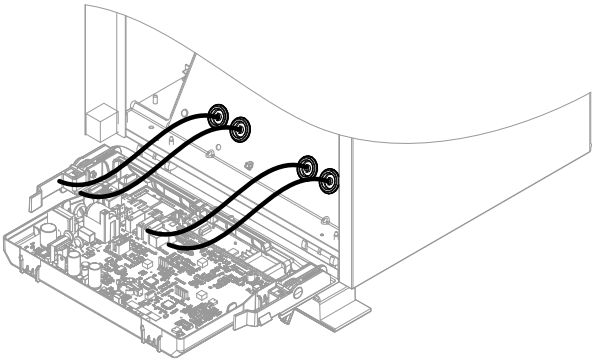

Fig. 16

Bundle cables using the supplied cable clips.
Route extra low voltage (ELV) leads < 42 V separately from cables > 42 V/230 V~.
Secure the cable clips on the underside using the supplied screws.
Do not route cables/leads over sharp edges or against the casing (sound transmission).

Please note
If connecting cables/leads come into contact with hot components, they will be damaged.
When routing and securing cables/leads on site, ensure that the maximum permissible temperatures for these cables/leads are not exceeded.

Closing the wiring chamber

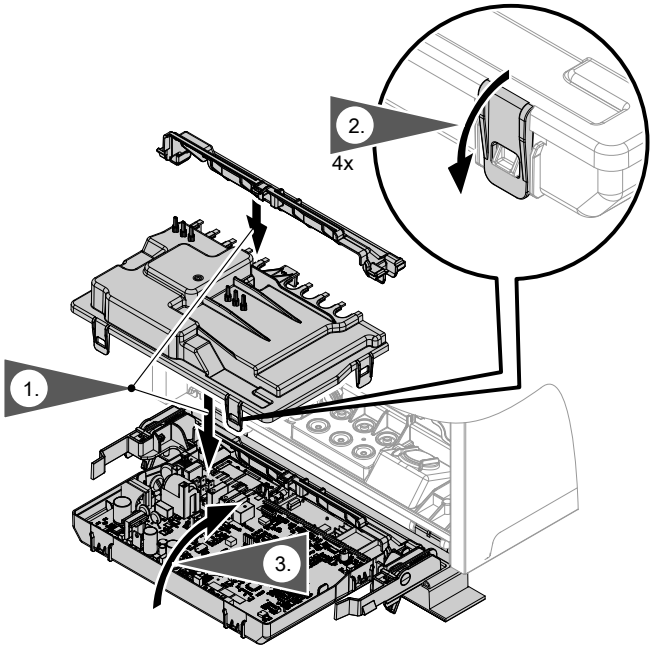

Fig. 17

Fitting the front panel

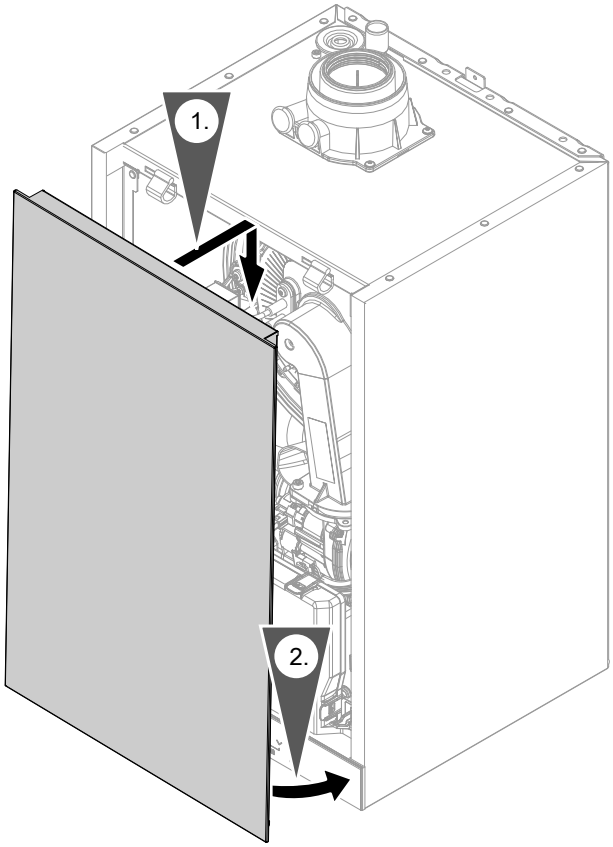

Fig. 18

Steps - commissioning, inspection and maintenance

Commissioning steps
Inspection steps
Maintenance steps

				Page
•			1. Commissioning the system	29
•		•	2. Filling the heating system	30
•	•	•	3. Checking all connections on the heating water and DHW sides for leaks	31
•			4. Venting the heating system	31
•			5. Checking the gas type	31
•	•	•	6. Removing the front panel	32
•	•	•	7. Checking the static pressure and supply pressure	32
•			8. Function sequence and possible faults	34
•			9. Setting the maximum heating output	35
	•	•	10. Performing an actuator test	35
•			11. Leak test on balanced flue system (annular gap test)	35
		•	12. Removing the burner	36
	•	•	13. Checking the burner gasket and burner gauze assembly	37
	•	•	14. Checking and adjusting the ignition and ionisation electrodes	38
		•	15. Cleaning the heating surfaces	38
	•	•	16. Checking the condensate drain and cleaning the trap	39
	•	•	17. Installing the burner	40
	•	•	18. Checking the neutralising system (if installed)	
•	•	•	19. Checking the electrical connections for firm seating	41
•	•	•	20. Checking all gas equipment for leaks at operating pressure	41
•	•	•	21. Fitting the front panel	41
•		•	22. Checking the combustion quality	41
•	•	•	23. Checking the flue system for unrestricted flow and leaks	
•	•	•	24. Checking the external LPG safety valve (if installed)	
•			25. Matching the control unit to the heating system	43
•			26. Adjusting the heating curves	43
•			27. Instructing the system user	43

6194585

Commissioning the system

! **Please note**
Only start the appliance with a fully filled trap.
Check that the trap has been filled with water.

Commissioning via commissioning assistant

1. Open the gas shut-off valve.

2. If the appliance has not been switched on yet: Turn on the ON/OFF switch.
   Call up the commissioning assistant:
   1. ≡ and **OK** simultaneously for approx. 4 s.
   2. Use ∧/∨ to select **"b.5"** and confirm with **"OK"**.
      Note
      ***AP** and ᯤ appear on the display. Confirm with **OK** to start the connection with the software tool: See chapter "Commissioning via software tool".*
   3. ≡ for 4 s to start the commissioning assistant via the heat generator display.

3. For further steps, see commissioning assistant in the following overview.

Commissioning via software tool

Note
Apps for commissioning and service are available for iOS and Android devices.

1. Open the gas shut-off valve.

2. **AP** and ᯤ appear on the display.
   Press **OK** to carry out commissioning with the software tool.

3. Select **ON** and confirm with **OK**.

4. Follow the instructions in the software tool.

Commissioning assistant sequence	Explanations and references
Commissioning	
"C.3" Gas type	2 - Natural gas CPG 3 - Liquid gas LPG
"C.5" Flue system	1 - Open flue 60 mm 2 - Room sealed 60/100 mm 3 - Open flue 80/125 mm 4 - Room sealed 80/125 mm 5 - Flexible 60 mm (room sealed or open flue) max. 10 m 6 - Flexible 80 mm (room sealed or open flue) max. 20 m
"C.6" Flue length	Given in full metres (round up if necessary) ***Note*** *An additional length of 1 m must be factored in for every flue bend.*
"C.7" Operating mode	4 - Weather-compensated 13 - Constant operation with optional room thermostat ***Note*** *In the event of a heat demand for central heating, plug 96 is scanned. In the event of a DHW demand, plug X7.3/4 (outlet temperature sensor) is scanned.*
	After the final setting has been completed, **"End"** appears on the display. Confirm with **"OK"**. The commissioning is started, the flue temperature sensor test is launched and **"Fst"** appears on the display.
The system carries out a restart.	

6194585

Commissioning the system (cont.)

Automatic flue gas temperature sensor check

The display shows: **"Er"**
If the flue gas temperature sensor is not positioned correctly, fault message 416 appears.
For further details regarding the flue gas temperature sensor test, see "Repairs".
If fault message 416 appears, reposition the flue gas temperature sensor in the flue gas connection. Check for leaks on the flue gas side.

Note
The burner remains locked out until the test has been passed.

When the fault has been remedied, turn the ON/OFF switch off and back on again.

Switching WiFi on/off

The appliance is equipped with an integrated WiFi communication module with extended type plate.
The internal communication module supports commissioning of the heat generator with the "ViGuide app", connectivity with the "ViCare app" and the connection to the "ViGuide" digital service centre.
The access details required for establishing a connection are recorded in the form of an access code with **"WiFi symbol"**. Three copies of this code are located on the rear of the programming unit.
Before installing the programming unit, remove the access code labels from the rear. For commissioning, affix one label to the space marked out on the type plate.
Switch on the WiFi connection and establish a connection to the router; see also page.

Note
*If **"E10"** is displayed, the connection to the home network could not be established. Check the router and the network password.*
*If **"E12"** is displayed, the connection to the server could not be established. Re-establish the connection at a later time.*

Activating the internet connection:

Operating instructions

Affix a further credentials label here, so it can be found for subsequent use:

Fig. 19

Affix a label in the operating instructions.

Note
*If the communication module is to be switched on or off, press ∨ and **OK** simultaneously for 4 s.*

Filling the heating system

Fill water

As a heat transfer medium for DHW heating, the heating water must meet fluid category ≤ 3. This requirement is met if water of potable quality is used as heating water. For example, if additives are used, the additive manufacturer must specify which category the treated heating water comes under.

! **Please note**
Unsuitable fill water increases the level of deposits and corrosion and may lead to appliance damage.
- Flush the heating system thoroughly before filling.
- Only use fill water of potable water quality.
- Special antifreeze suitable for heating systems can be added to the fill water. The antifreeze manufacturer must verify its suitability.
- Fill and top-up water with a water hardness in excess of over 300 ppm must be softened, e.g. with a small softening system for heating water.

6194585

Checking all connections on the heating water and DHW sides for leaks

Danger
There is a risk of electric shock from escaping heating water or DHW.
When commissioning and after carrying out maintenance work, check all water side connections for leaks.

Please note
Leaking hydraulic connections lead to appliance damage.
- Check the internal and on-site hydraulic connections for leaks.
- In the event of leaks, switch off the appliance immediately. Drain the heating water. Check the seating of seal rings. **Always** replace displaced seal rings.

Venting the heating system

Note
If the heating system has not been completely vented, the heating water flow rate can be too low. This can lead to the burner being switched off by internal safety equipment before the specified set boiler water temperature is achieved.

1. Close the gas shut-off valve and switch the appliance ON.
2. Activate the venting program (see commissioning assistant or following chapter).
3. Adjust the system pressure.
   The display shows the system pressure.
   - Sealed unvented heating system:
     Adjust the operating pressure to ≥0.8 bar using the fill valve.
   - Open vented heating system:
     The static head must be at least 0.2 bar.
4. Disconnect the supply hose from the boiler drain & fill valve.
5. Open the gas shut-off valve.

Checking the gas type

The boiler is equipped with an electronic combustion controller that adjusts the burner for optimum combustion in accordance with the prevailing gas quality.
- Operation with natural gas therefore requires no adjustment across the entire Wobbe index range. The boiler can be operated within the Wobbe index range 9.5 to 15.2 kWh/m^3 (34.2 to 54.7 MJ/m^3).
- For operation with LPG, the gas type needs to be changed on the control unit (see following chapter).

1. Determine the gas type and Wobbe index by asking your local gas supply utility or LPG supplier.
2. Record the gas type in the report.

Changing the gas type for operation with LPG (not for appliances with multiple connection)

1. To change the gas type on the control unit, see "Commissioning the system with the commissioning assistant"
2. Affix label "G31" (supplied with the technical documentation) next to the type plate on the cover panel.

Note
No mechanical adjustments are made to the gas solenoid valve.

Removing the front panel

Danger
Contact with live components can lead to serious injury from electric current. Some components on PCBs remain live even after the power supply has been switched off.

- **Do not touch** the wiring chambers (control unit and mains connections).
- When working on the appliance, isolate the system from the power supply, e.g. at a separate MCB/fuse or a mains isolator. Check the system is no longer live and safeguard against reconnection.
- Prior to working on the appliance, wait at least 4 min until the voltage has completely dropped out.

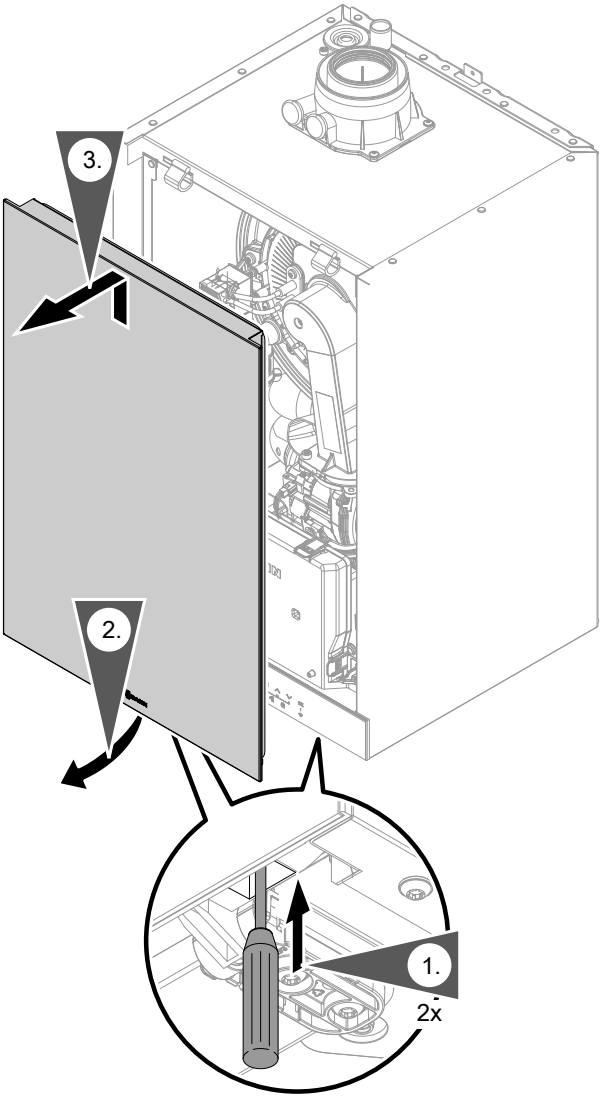

Fig. 20

Checking the static pressure and supply pressure

Danger
CO formation as a result of incorrect burner adjustment can have serious health implications. Always carry out a CO test before and after work on gas appliances.

Note
Operation with LPG:
Purge the LPG tank twice on commissioning/replacement. Vent the tank and gas connection line thoroughly after purging.

Checking the static pressure and supply pressure (cont.)

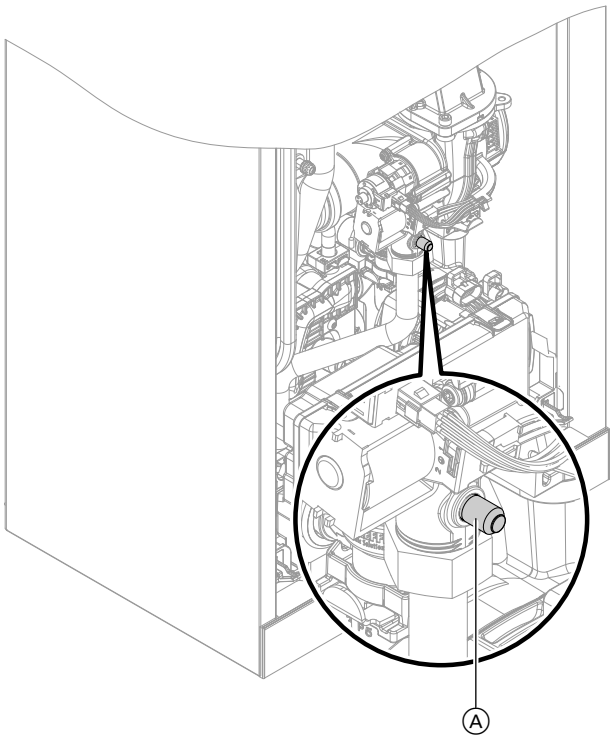

Fig. 21

1. Turn off the ON/OFF switch.
2. Close the gas shut-off valve.
3. Undo screw Ⓐ in the test connector on the gas solenoid valve, but do not remove it. Connect the pressure gauge.
4. Open the gas shut-off valve.
5. Measure the static pressure and record it in the report.
   Set value: Max. 57.5 mbar (5.75 kPa).
6. Turn on the ON/OFF switch and start the boiler.

   Note
   During commissioning, the appliance can enter a fault state if there are airlocks in the gas line. Reset the appliance after approx. 5 s (see operating instructions).

7. Measure the supply (flow) pressure. For set values, see the following table.

   Note
   Use a suitable measuring device with a resolution of at least 0.1 mbar (0.01 kPa) to check the supply pressure.

8. Record the measured value in the report. Implement measures as indicated in the table below.
9. Shut down the boiler. Close the gas shut-off valve. Remove the pressure gauge. Use the screw to close test connector Ⓐ.
10. Open the gas shut-off valve and start the appliance.

    Danger
    Gas escaping from the test connector leads to a risk of explosion.
    Check gas tightness at test connector Ⓐ.

11. Fit front panel (see installation sequence).

Supply pressure (flow pressure)		Measures
With natural gas	**For LPG**	
< 13 mbar (1.3 kPa)	< 25 mbar (2.5 kPa)	Do not start the appliance. Notify the gas supply utility or LPG supplier.
13 to 25 mbar (1.3 to 2.5 kPa)	25 to 57.5 mbar (2.5 to 5.75 kPa)	Start the boiler.
> 25 mbar (2.5 kPa)	> 57.5 mbar (5.75 kPa)	Connect a separate gas pressure governor upstream of the system. Set the pre-charge pressure to 20 mbar (2.0 kPa) for natural gas and 50 mbar for LPG. Notify the gas supply utility or LPG supplier.

Function sequence and possible faults

		Display		Measure
Control unit issues a heat demand		No →		Increase set value. Ensure heat transfer.
↓ Yes				
Fan starts	No →	Fault 59, 457	→	Check the fan connecting cables. Check the fan power supply.
↓ Yes				
Ignition	No →	Fault 359	→	Check ignition module (control voltage 230 V across plug "X1/54" terminals "L" and "N" on the HBMU). Check the gas supply.
↓ Yes				
Gas solenoid valve opens	No →	Fault 357	→	Check the gas supply pressure.
↓ Yes				
Ionisation current builds	No →	Fault 369, 380	→	Check distance of ionisation electrode on burner gauze assembly. Purge the gas line.
↓ Yes				
Burner in operation	No →	Shuts down below the set boiler water temperature and restarts immediately.	→	Check the flue system for tightness (flue gas recirculation). Check gas flow pressure.
↓ Yes				
Automatic calibration of the combustion controller	No →	Fault 62, 373	→	Ensure adequate heat transfer. Reset the appliance.
		Fault 346, 377		Check gap between ionisation electrode and burner gauze assembly. Check flue system. Remove flue gas recirculation if required. Reset the appliance. Operating instructions

For further details regarding faults, see "Troubleshooting".

6194585

Setting the maximum heating output

Note
It is not possible to set the max. heating output for type B1GA-11.

A limit can be set on the maximum heating output for **heating mode**. The limit is set via the modulation range.

Note
The flow rate must be checked before the max. heating output can be adjusted. Ensure adequate heat transfer.

Tap the following buttons:

1. ≡ and **OK** simultaneously for approx. 4 s, then release.
2. Use ∧/∨ to select **"b.2"** for system configuration.
3. **OK**
4. Use ∧/∨ to select **"7"** for max. heating output.
5. **OK**
6. Use ∧/∨ to set the required value in % of rated heating output. Delivered condition 100 % (100 % = **"HI"** on the display).
7. **OK**

Performing an actuator test

The actuator test can only be set via the software tool

Leak test on balanced flue system (annular gap test)

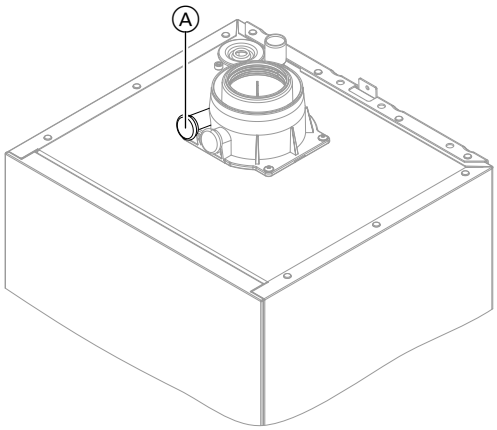

Fig. 22

Ⓐ Combustion air aperture

For balanced flue systems tested together with the heat generator, there is no requirement for a tightness test (overpressure test) during commissioning by the flue gas inspector.
In this case, we recommend that a simple tightness test is carried out during system commissioning. For this, check the CO_2 or O_2 concentration in the combustion air at the annular gap of the balanced flue pipe.
If the CO_2 concentration is less than 0.2 % or the O_2 concentration is greater than 20.6 %, the flue pipe is deemed to be sufficiently gas-tight.

If actual CO_2 values are greater or O_2 values are lower, then pressure test the flue pipe with a static pressure of 200 Pa.

! **Please note**
If the test port is not sealed, combustion air is drawn in from the room.
After the tightness test, re-seal the test port with the plug.

6194585

Removing the burner

Danger
Contact with live components can lead to serious injury from electric current. Some components on PCBs remain live even after the power supply has been switched off.

- **Do not touch** the wiring chambers (control unit and mains connections).
- When working on the appliance, isolate the system from the power supply, e.g. at a separate MCB/fuse or a mains isolator. Check the system is no longer live and safeguard against reconnection.
- Prior to working on the appliance, wait at least 4 min until the voltage has completely dropped out.

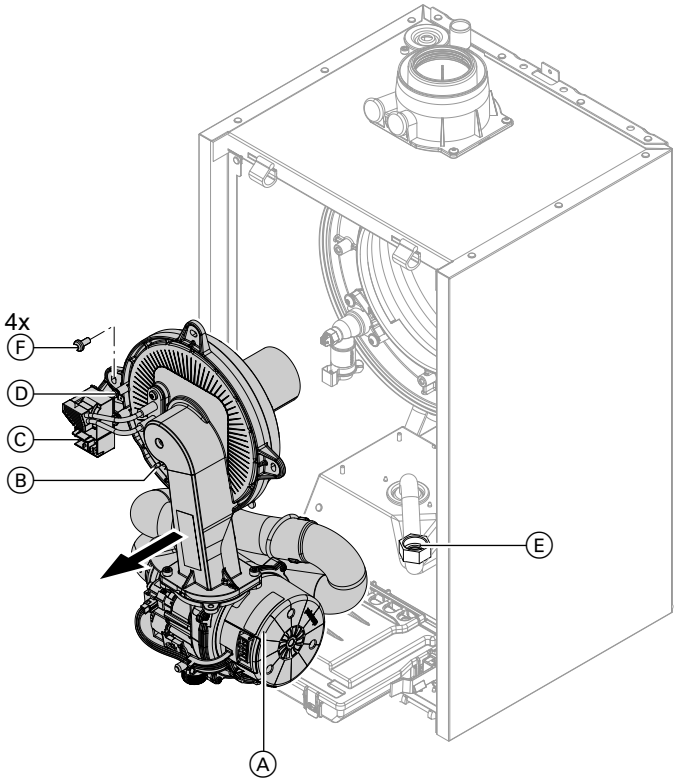

Fig. 23

1. Turn off the ON/OFF switch.
2. Close the gas shut-off valve and safeguard against reopening.
3. Disconnect cables and leads from:
   - Fan motor Ⓐ (2 plugs)
   - Ionisation electrode Ⓑ
   - Ignition unit Ⓒ
   - Earth Ⓓ
4. Undo gas supply pipe fitting Ⓔ.
5. Undo 4 screws Ⓕ and remove the burner.

   Note
   Cover gas connection Ⓔ so that no small parts can fall into it.

6194585

Checking the burner gasket and burner gauze assembly

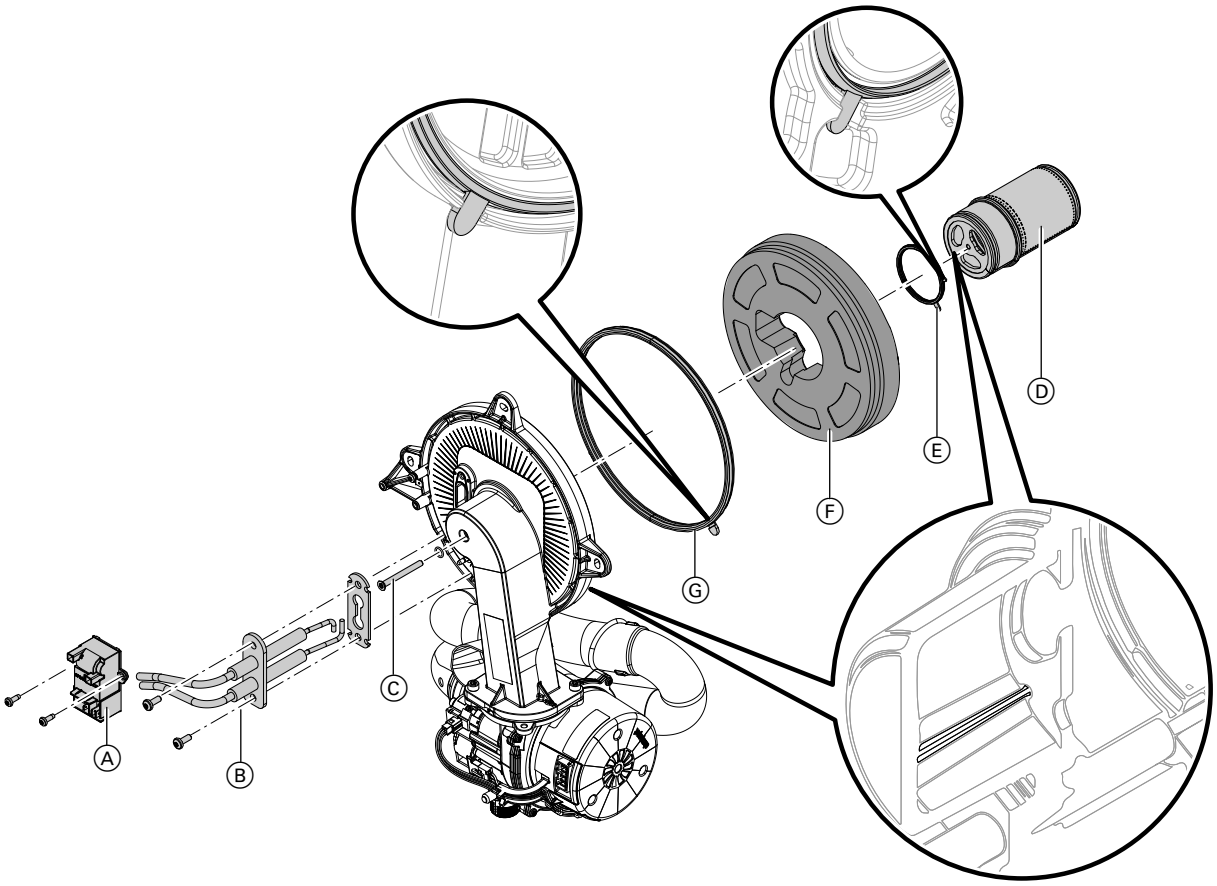

Fig. 24

Check burner gauze assembly Ⓓ, electrodes Ⓑ, thermal insulation ring Ⓕ and gasket Ⓖ for damage. Only remove and replace components if they are damaged or worn.

Note
If replacing the burner gauze assembly, also replace the gauze assembly gasket and the fixing screw.

1. Disconnect plug with ignition electrode leads from ignition unit Ⓐ.

2. Remove electrodes Ⓑ.

3. Undo Torx screw Ⓒ. Hold onto burner gauze assembly Ⓓ when undoing the screw.

4. Remove burner gauze assembly Ⓓ with gasket Ⓔ and thermal insulation ring Ⓕ. Check components for damage.

5. Install new burner gasket Ⓖ. Observe correct installation position. Align the tab as per the diagram.

6. Insert thermal insulation ring Ⓕ and burner gauze assembly Ⓓ with gasket Ⓔ. Observe correct installation position. Align the tab as per the diagram.

7. Align the hole in burner gauze assembly Ⓓ with the burner door pin.
   Secure burner gauze assembly Ⓓ and gasket Ⓔ with Torx screw Ⓒ.
   Tighten screws as tightly as necessary and ensure that the components are undamaged and are functioning correctly throughout service life.
   Observe torque settings if a torque wrench is available.
   Torque: 3.0 Nm.

8. Check thermal insulation ring Ⓕ for firm seating.

9. Fit electrodes Ⓑ. Check clearances, see following chapter.
   Tighten screws as tightly as necessary and ensure that the components are undamaged and are functioning correctly throughout service life.
   Observe torque settings if a torque wrench is available.
   Torque: 4.5 Nm.

6194585

Checking and adjusting the ignition and ionisation electrodes

Burners 11, 16, 19 and 25 kW

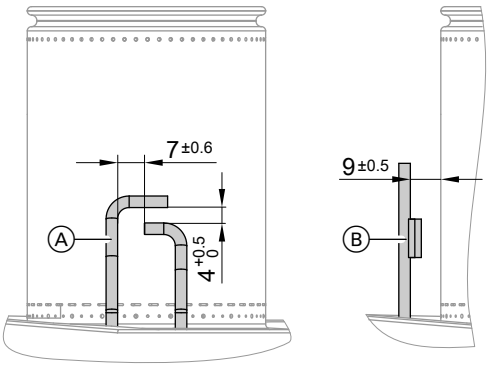

Fig. 25

Ⓐ Ignition electrodes
Ⓑ Ionisation electrode

1. Check the electrodes for wear and contamination.
2. Clean the electrodes with a small brush (not a wire brush) or sandpaper.
3. Check the electrode gaps. If the gaps are not as specified or the electrodes are damaged, replace the electrodes and gaskets and adjust them as required.
   Tighten screws as tightly as necessary and ensure that the components are undamaged and are functioning correctly throughout service life.
   Observe torque settings if a torque wrench is available.
   Tighten the electrode fixing screws to a torque of 4.5 Nm.

Burner 32 kW

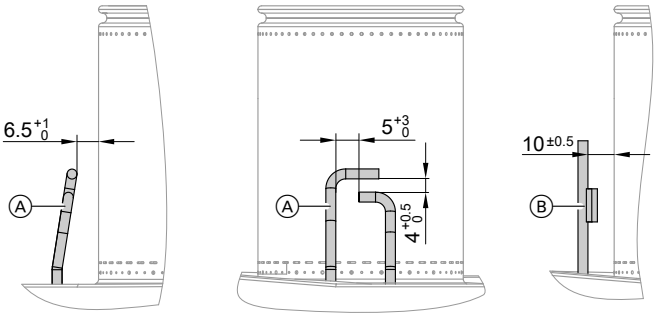

Fig. 26

Ⓐ Ignition electrodes
Ⓑ Ionisation electrode

1. Check the electrodes for wear and contamination.
2. Clean the electrodes with a small brush (not a wire brush) or sandpaper.
3. Check the electrode gaps. If the gaps are not as specified or the electrodes are damaged, replace the electrodes and gaskets and adjust them as required.
   Tighten screws as tightly as necessary and ensure that the components are undamaged and are functioning correctly throughout service life.
   Observe torque settings if a torque wrench is available.
   Tighten the electrode fixing screws to a torque of 4.5 Nm.

Cleaning the heating surfaces

! **Please note**
Scratches to the surfaces of the heat exchanger that come into contact with hot gas can result in corrosion damage. Brushing can cause deposits to become lodged in the gaps between the coils. **Do not use brushes to clean the heating surfaces.**

! **Please note**
Prevent damage due to cleaning water.
Cover electronic components with suitable watertight material.

Note
Discolouration on the heat exchanger surface is a normal sign of use. It has no bearing on the function or service life of the heat exchanger.
The use of chemical cleaning agents is not required.

6194585

Cleaning the heating surfaces (cont.)

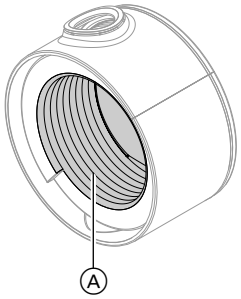

Fig. 27

1. Use a vacuum cleaner to remove combustion residues from heating surface Ⓐ of the heat exchanger.
2. Flush heating surface Ⓐ with water.
3. Check condensate drain. Clean the trap: See the following chapter.
4. Check the thermal insulation mat (if fitted) in the heat exchanger for damage; replace if necessary.

Checking the condensate drain and cleaning the trap

! **Please note**
Prevent damage due to condensate.
Cover electronic components with suitable watertight material.

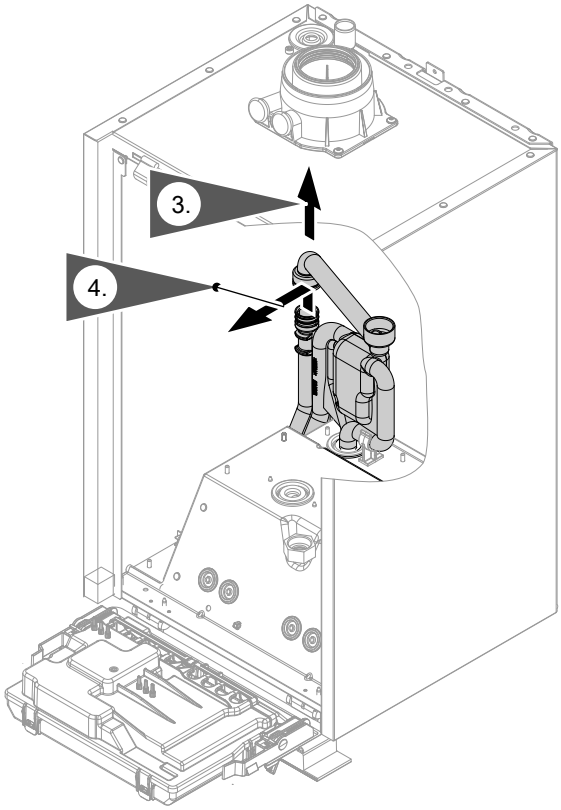

Fig. 28

1. Pivot the HBMU heat management unit forwards.
2. Cover electronic components with suitable watertight material.
3. Remove the black supply hose.
4. Pull trap upwards out of the drain hose.
5. Hold trap as straight as possible and remove. Ensure that no condensate runs out.
6. Clean the trap.
7. Fill the trap with water and refit it on the drain hose.

   ! **Please note**
   If the trap is not filled with water, flue gas can escape.
   Only start the appliance when the trap has been filled.
   Check that the trap is seated correctly.

8. Refit supply hose.
9. ⚠ **Danger**
   Risk of electric shock from escaping condensate
   Check the connections for leaks and check that the trap is seated correctly.

   Note
   Route the drain hose without any bends and with a constant fall.

Multi boiler system:
Clean the trap in the flue gas collector as well.

6194585

Installing the burner

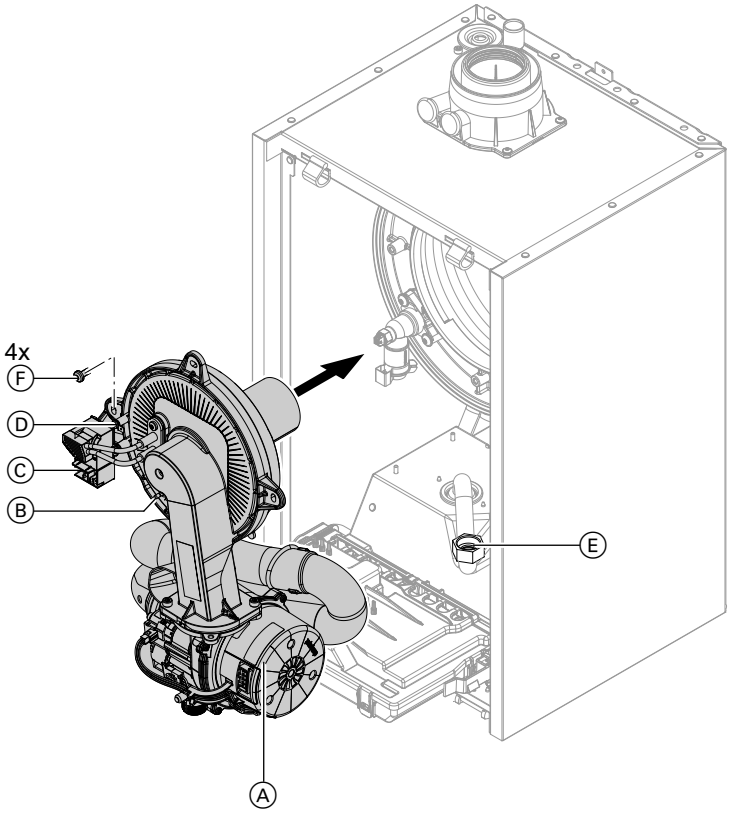

Fig. 29

1. Insert the burner. Tighten screws Ⓕ diagonally. Tighten screws as tightly as necessary and ensure that the components are undamaged and are functioning correctly throughout service life.
   Observe torque settings if a torque wrench is available.
   Torque: 6.5 Nm

2. Fit gas connection pipe Ⓔ with a new gasket. Tighten screws as tightly as necessary and ensure that the components are undamaged and are functioning correctly throughout service life.
   Observe torque settings if a torque wrench is available.
   Check for gas tightness to BSI 6891.
   Torque: 30 Nm

3. Check the gas connections for leaks.

   Danger
   Escaping gas leads to a risk of explosion. Check all fittings for gas tightness. In the case of wall mounted appliances, also check the gas shut-off valve fitting on the underside.

4. Connect the cables/leads:
   - Fan motor Ⓐ (2 plugs)
   - Ionisation electrode Ⓑ
   - Ignition unit Ⓒ
   - Earth Ⓓ

Checking the neutralising system (if installed)

Checking the electrical connections for firm seating

Danger
Contact with live components can lead to serious injury from electric current. Some components on PCBs remain live even after the power supply has been switched off.

- **Do not touch** the wiring chambers (control unit and mains connections).
- When working on the appliance, isolate the system from the power supply, e.g. at a separate MCB/fuse or a mains isolator. Check the system is no longer live and safeguard against reconnection.
- Prior to working on the appliance, wait at least 4 min until the voltage has completely dropped out.

Checking all gas equipment for leaks at operating pressure

Danger
Escaping gas leads to a risk of explosion.
Check gas equipment (including inside the appliance) for leaks.

Note
Only use suitable and approved leak detection agents (EN 14291) and devices for the tightness test. Leak detection agents with unsuitable constituents (e.g. nitrides, sulphides) can cause material damage. Remove residues of the leak detection agent after testing.

Fitting the front panel

See page 27.

Checking the combustion quality

The electronic combustion controller automatically ensures optimum combustion quality. During commissioning/maintenance, only the combustion values need to be checked. To do this, test the CO content and CO_2 or O_2 content, and record these in the report on page 75.

Note
To prevent operating faults and damage, operate the appliance with uncontaminated combustion air.

Permissible CO content

The CO content must be < 1000 ppm for all gas types.

Checking the combustion quality (cont.)

Permissible CO_2 or O_2 content

Operation with natural gas

Rated heating output (kW)	CO_2 content (%)		O_2 content (%)	
	Upper heating output	Lower heating output	Upper heating output	Lower heating output
11	7.3 to 10.5	7.3 to 10.5	2.1 to 8.4	2.1 to 8.4
16	7.3 to 10.5	7.3 to 10.5	2.1 to 8.4	2.1 to 8.4
19	7.3 to 10.5	7.3 to 10.5	2.1 to 8.4	2.1 to 8.4
25	7.3 to 10.5	7.3 to 10.5	2.1 to 8.4	2.1 to 8.4
32	7.3 to 10.5	7.3 to 10.5	2.1 to 8.4	2.1 to 8.4

Operation with LPG

Rated heating output (kW)	CO_2 content (%)		O_2 content (%)	
	Upper heating output	Lower heating output	Upper heating output	Lower heating output
11	8.4 to 11.8	8.4 to 11.8	3.1 to 8.1	3.1 to 8.1
16	8.4 to 11.8	8.4 to 11.8	3.1 to 8.1	3.1 to 8.1
19	8.4 to 11.8	8.4 to 11.8	3.1 to 8.1	3.1 to 8.1
25	8.4 to 11.8	8.4 to 11.8	3.1 to 8.1	3.1 to 8.1
32	8.4 to 11.8	8.4 to 11.8	3.1 to 8.1	3.1 to 8.1

If the actual CO, CO_2 or O_2 values lie outside their respective ranges, proceed as follows:
- Check the balanced flue system for leaks; see page 35.
- Check the ionisation electrode and connecting cable, see page 38.

Note
During commissioning, the combustion controller carries out an automatic calibration. Allow approx. 50 s after the burner has started before testing the emissions.

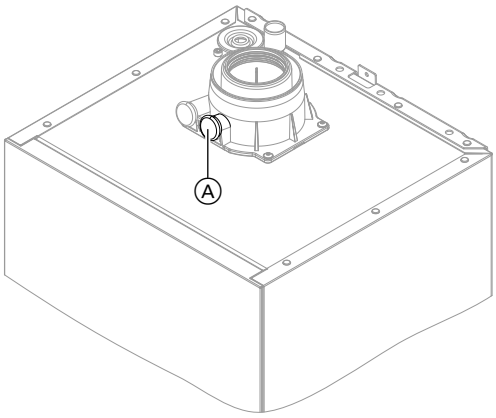

Fig. 30

1. Connect a flue gas analyser at flue gas port Ⓐ on the boiler flue connection.
2. Open the gas shut-off valve. Start the boiler. Create a heat demand.
3. Adjust the lower heating output. See the following chapter.
4. Check the CO_2 content. If the actual value deviates from the permissible ranges, implement steps listed above.
5. Enter the actual value into the report.
6. Adjust the upper heating output. See the following chapter.
7. Check the CO_2 content. If the actual value deviates from the permissible ranges by more than 1 %, implement steps listed above.
8. Enter the actual value into the report.
9. Re-seal test port Ⓐ.

Danger
Escaping flue gas can damage your health. Check test port Ⓐ for leaks.

6194585

Checking the combustion quality (cont.)

Regulating to the upper/lower heating output

Note
Ensure adequate heat transfer.

Tap the following buttons:

1. ≡ and **OK** simultaneously for approx. 4 s, then release.
2. Use ∧/∨ to select **"b.6"** for the upper/lower heating output.
3. **OK**
4. Use ∧/∨ to set the value.
   "OF" - off
   "1" - Min. heating output
   "2" - Max. heating output
5. **OK**
   Burner is operating with correspondingly adjusted heating output.

Checking the flue system for unrestricted flow and leaks

Checking the external LPG safety valve (if installed)

Matching the control unit to the heating system

The control unit must be matched to the system equipment level.
Set the parameters according to the accessories fitted:

Accessory installation instructions

Adjusting the heating curves

Tap the following buttons:

1. ≡
2. Use ∧/∨ to select **"P.3"** for the heating curve.
3. **OK**
4. Use ∧/∨ to adjust the slope.
5. **OK**
6. Use ∧/∨ to adjust the level.
7. **OK** to confirm

Instructing the system user

The system installer should hand the operating instructions to the system user and instruct the user in operating the system.

This includes all components installed as accessories, e.g. remote control units. In addition, the system installer must make the user aware of the required maintenance work.

Calling up parameters

Note
The display and setting of some parameters is dependent on:
- *Heat generator*
- *Connected accessories and the functions associated with them*

Tap the following buttons:

1. ≡ and **OK** simultaneously for approx. 4 s, then release.
2. Use ∧/∨ to select **"b.2"** for system configuration.
3. **OK**
4. Use ∧/∨ to select the parameter for adjustment. See tables below.
5. **OK**
6. ∧/∨ for the required value.
7. **OK**

Note
Further parameters can be called up via the software tool.

Parameter

Note
*Parameter values in **bold** are factory settings.*

3 "Scald protection"

Setting		Explanations
		The adjustable DHW temperature is limited to a maximum value.
Off	0	Scald protection off ⚠ **Danger** Risk of injury due to higher DHW temperature. Inform the system user of the risk from the higher outlet temperature at the draw-off points.
ON	**1**	Scald protection on (max. DHW temperature 60 °C) ***Note*** *Even with the scald protection switched on, higher outlet temperatures may occur at the draw-off points in the following cases:* ▪ *While the appliance is being calibrated*

6 "Minimum heating output"

Setting		Explanations
		A limit can be set on the minimum heating output for heating mode.
	...	Delivered condition specified by settings specific to the appliance
	0 to 100	Adjustable from 0 to 100 %

7 "Maximum heating output"

Setting		Explanations
		A limit can be set on the maximum heating output for heating mode.
	100	Heating output in the delivered condition 100 %
	0 to 100	Adjustable from 0 to 100 %

Parameter (cont.)

8 "Maximum flow temperature limit, heating circuit 1"

Setting		Explanations
		Maximum flow temperature limit for the heating circuit Maximum limit in the delivered condition 82 °C Setting range limited by heat generator-specific parameters

Energy saving functions (setting only via software tool)

2426.1 Weather-compensated heating circuit pump logic function (only for weather-compensated control units).

Setting		Explanations
		If the outside temperature is above the threshold value (the selected set room temperature plus the hysteresis in K), the heating circuit pump is switched off. If the outside temperature is below the threshold value (selected set room temperature plus hysteresis in K), the heating circuit pump is switched on.

2426.3 Room temperature-dependent heating circuit pump logic for heating circuit 1 (only for weather-compensated control units).

Setting		Explanations
		If the actual room temperature is above the threshold value (selected set room temperature plus offset in K), the heating circuit pump is switched off. If the actual room temperature is below the threshold value (selected set room temperature plus offset in K), the heating circuit pump is switched on.

1667.0 Pump activation, heating circuit pump in standby mode (via software tool)

Setting		Explanations
		Operating mode, heating circuit pump
	0	In "Standby mode" = permanently switched off
	1 to 24	When in "Standby mode", switched on 1 to 24 times a day for 10 min in constant operation and for 50 min in weather-compensated mode

1395.1 "Heating limit: Economy function, outside temperature, heating circuit 1"

Setting		Explanations
		Heating circuit pump logic function (summer economy control): Heating circuit pump switches off when outside temperature is 1 K above selected value. Heating circuit pump switches back on when outside temperature is 1 K below selected value.
25 °C	**25**	Heating limit at outside temperature 25 °C
	10 to 35	Heating limit adjustable from 10 to 35 °C

Parameter (cont.)

2855.1 "Additional (passive) frost protection configuration, heating circuit 1"

Setting		Explanations
	1	= 1 °C Setting range: -9 °C to +3 °C If the outside temperature falls below the set outside temperature limit, the corresponding heating circuit pump switches on (applies only to weather-compensated operation).

Service menu

Calling up the service menu

Tap the following buttons:

1. ≡ and **OK** simultaneously for approx. 4 s, then release.

2. Select the required menu section (e.g. **"b.1"** Connect with software tool).

   Note
   Not all menu areas will be available, depending on the system equipment level.

Note
Tap "≡" to return to the service menu.

Service menu overview

Service	
Er Active messages	
b.1 Connect with software tool	
b.2 System configuration	
b.3 Diagnostics	
	d.1 Outside temperature
	d.2 Heat generator flow temperature
	d.4 Flue gas temperature
	d.5 Burner hours run
	d.6 Burner output
	d.8 Serial number of heat generator
	d.9 Heating circuit 1 flow temperature
b.4 Message history	
b.5 Commissioning assistant	
b.6 Start upper/lower heating output for test mode	

Exiting the service menu

Tap the following buttons:

"≡" several times.

Note
The system exits the service menu automatically after 30 min.

Diagnosis

Checking operating data

Operating data can be checked in various areas. See **"Diagnosis"** in the service menu overview.
Operating data on heating circuits with mixer can only be called up if such components are installed in the system.

Note
*If a called up sensor is faulty, **"- - -"** appears on the display.*

Calling up operating data

Tap the following buttons:

1. ≡ and **OK** simultaneously for approx. 4 s, then release.

2. Use ∧/∨ to select **"b.3"** for diagnostics.

3. **OK**

▶▶

Diagnosis (cont.)

4. Use ∧/∨ to select the required entry.

   Note
   "d.8" Use ∧/∨ to view the heat generator serial number in sections.

5. **OK**

Fault display on the programming unit

A fault in the burner control unit causes the display to show "⚠".

Note
If a central fault message facility is connected, this is switched on.

Calling up fault messages

Tap the following buttons:

1. ≡ and **OK** simultaneously for approx. 4 s, then release.
2. ∧/∨ for **"Er"** message list
3. **OK**
4. ∧/∨ to select fault entry **"E.1, E.2..."**.
5. **OK**
6. Fault code is displayed.

   Note
   If the fault code has 3 digits, the first two digits are shown first and then the last digit.

Acknowledging the fault display

Calling up the fault in the **"Er"** menu automatically acknowledges the fault display.

Calling up acknowledged fault messages

Tap the following buttons:

1. "≡"
2. ∧/∨ to select **"Er"**.
3. **OK**
4. ∧/∨ to call up fault entry **"E.1 to E.5"**.
5. **OK**
6. ∧/∨ to display the fault code.

Calling up fault messages from the fault memory (message history)

The 5 most recent faults (including those remedied) are saved and can be called up.
Faults are sorted by date.

Tap the following buttons:

1. ≡ and **OK** simultaneously for approx. 4 s, then release.
2. ∧/∨ for **"b.4"** message history
3. **OK**
4. Use ∧/∨ to select fault entry **"E.1, E.2... or E. 5"**.
   For messages, see chapter "Further messages".
5. **OK**
6. ∧/∨ for the required message
7. **OK**

Resetting the burner

The display shows [L and ⚠ flashes.
The burner is locked due to a fault.
Reset the burner:

Note
The burner fault display can be closed by pressing ≡ for 4 s. The fault can be opened later by tapping ∧ ∨ simultaneously.
A reset is only possible after the burner has cooled down.

Tap the following buttons:

1. ∧ / ∨ to display the fault number.
2. ∧ and ∨ simultaneously for approx. 4 s.
   A rotating bar appears on the display. The reset process has started.
   If the fault no longer exists, the home screen will appear.

Overview of electronics modules

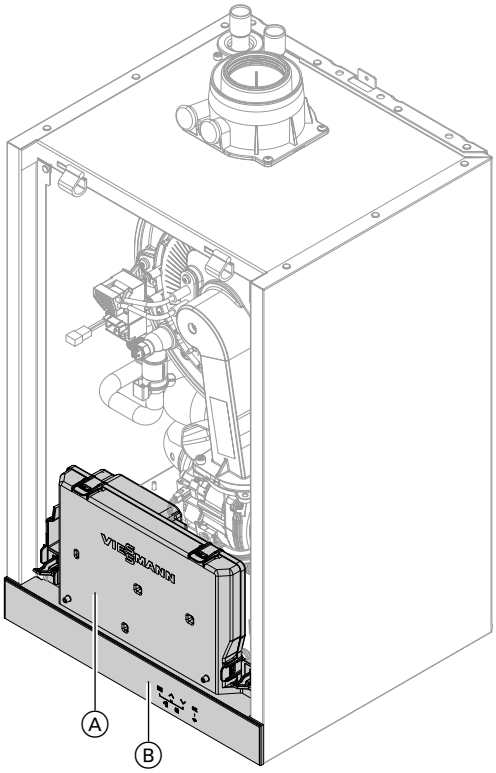

Fig. 31

Ⓐ HBMU heat management unit
Ⓑ Programming unit

Fault messages

Note
For diagnostics and troubleshooting, see chapter "Repairs".
Fault messages dependent on appliance equipment level

Displayed fault code	System characteristics	Cause	Measures
7	No DHW heating	Lead break, cylinder temperature sensor	▪ Check the DHW setting in the commissioning assistant and correct if necessary. ▪ Check the cylinder temperature sensor (terminal 2). ▪ Measure voltage at sensor input on HBMU heat management unit. Set value: 3.3 V– with sensor disconnected Replace faulty component if necessary.
8	No DHW heating	Short circuit, cylinder temperature sensor	Check the cylinder temperature sensor (terminal 2). Replace faulty component if necessary.

Fault messages (cont.)

Displayed fault code	System characteristics	Cause	Measures
13	Regulates as if the outside temperature were 0 °C.	Lead break, outside temperature sensor	▪ Check the operating mode setting in the commissioning assistant and remedy if necessary. ▪ Check the outside temperature sensor and connection to sensor (terminal O.T.S). ▪ Measure voltage at sensor input on HBMU heat management unit. Set value: 3.3 V– with sensor disconnected Replace faulty component if necessary.
14	Regulates as if the outside temperature were 0 °C.	Short circuit, outside temperature sensor	Check the outside temperature sensor and connection to sensor (terminal O.T.S). Replace faulty components if necessary.
49	Burner in a fault state	Lead break, flue gas temperature sensor	Check flue gas temperature sensor. Reset the appliance.
50	Burner in a fault state	Short circuit, flue gas temperature sensor	Check flue gas temperature sensor. Reset the appliance.
57	Normal operation without room influence	Lead break, room temperature sensor	▪ Check commissioning setting of remote control. ▪ Check plug and cable of external room temperature sensor, heating circuit. ▪ If no external room temperature sensor installed, replace Vitotrol programming unit.
58	Normal operation without room influence	Short circuit, room temperature sensor	Check plug and cable of external room temperature sensor, heating circuit. If no external room temperature sensor installed, replace Vitotrol programming unit.
59	Burner locked out, boiler circuit pump off. No central heating, no DHW heating	Power supply, undervoltage	Check mains voltage. If voltage is correct and the fault occurs repeatedly, replace the fan unit.
62	Burner in a fault state	High limit safety cut-out has responded.	▪ Check heating system fill level. ▪ Check pre-charge pressure in diaphragm expansion vessel. Adjust to required system pressure. ▪ Check whether flow rate is sufficient (circulation pump). ▪ Check function of 3-way diverter valve. Vent the system. Reset the appliance.

Fault messages (cont.)

Displayed fault code	System characteristics	Cause	Measures
63	Burner in a fault state	Flue gas temperature limiter has responded.	▪ Check heating system fill level. ▪ Check pre-charge pressure in diaphragm expansion vessel. Adjust to required system pressure. ▪ Check whether flow rate is sufficient (circulation pump). ▪ Check function of 3-way diverter valve. Vent the system. Reset the appliance once the flue system has cooled down.
67	Burner in a fault state	Ionisation current lies outside the permissible range	Check gas supply (gas pressure and gas flow switch), check gas solenoid valve and inlet strainer. Check ionisation electrode for the following: ▪ Clearance to burner gauze assembly ▪ Check electrode/burner gauze assembly for contamination. If specified measures do not help, replace fan unit. Reset the appliance.
68	Burner in a fault state	Flame signal is already present at burner start.	Close the gas shut-off valve. Remove connecting cable of the ionisation electrode. Reset the appliance. If the fault persists, replace the HBMU heat management unit. See chapter "Replacing the HBMU heat management unit".
69	Burner in a fault state	Ionisation current lies outside the permissible range	Check ionisation electrode for the following: ▪ Check whether insulation block is touching electrode ceramic. ▪ Check gas solenoid valve: In the service menu under "b.6", set the burner output to the lower heating output for approx. 4 min. If the fault occurs, replace the HBMU heat management unit. See chapter "Replacing the HBMU heat management unit". ▪ Change the burner output from lower to upper heating output in the service menu under "b.6". If this fault occurs during modulation, check the inlet strainer for contamination. Replace the fan unit if necessary.
70	Burner in a fault state	HBMU heat management unit internal fault	Replace the HBMU heat management unit. See chapter "Replacing the HBMU heat management unit".

Fault messages (cont.)

Displayed fault code	System characteristics	Cause	Measures
71	Burner in a fault state	Fan speed too low	▪ Check fan for blockage. ▪ Check setting for gas type and flue system. Reset the appliance.
73	Burner in a fault state	Internal communication error	Reset the appliance. If the fault occurs repeatedly, replace the HBMU heat management unit. See chapter "Replacing the HBMU heat management unit".
74	Burner locked out. Internal circulation pump off. No central heating and no DHW heating	System pressure too low	Top up with water. Vent the system. If the fault occurs repeatedly: ▪ Check system pressure sensor with external pressure gauge. ▪ Check diaphragm expansion vessel pre-charge pressure. ▪ Check settings for set system pressure and range.
77	Burner in a fault state	HBMU heat management unit data memory	Reset the appliance. If the fault occurs repeatedly, replace the HBMU heat management unit. See chapter "Replacing the HBMU heat management unit".
89	No central heating and no DHW heating	Internal circulation pump blocked	Check circulation pump. Replace if necessary.
91	Function of affected extension in emergency mode	DIO electronics module communication error	Check connections to DIO electronics module and connection to HBMU heat management unit.
92	Function of the relevant electronics module in emergency mode	ADIO electronics module communication error	▪ Check the setting in the commissioning assistant and correct if necessary. ▪ Check connections and leads to the ADIO electronics module. ▪ Check PlusBus voltage level (24 to 28 V). ▪ Check the subscriber number at rotary switch S1 and correct if necessary.
95	Burner not operational	OpenTherm remote control not connected	▪ Check connection to the OpenTherm remote control. ▪ If OpenTherm is not required, set C.7 in the commissioning assistant to a value not equal to 14.
100	Electronics modules connected to PlusBus not functioning	PlusBus voltage error	Check whether the PlusBus power supply on the HBMU heat management unit is OK: Remove all connected PlusBus components and reconnect one by one. Check that no more than one Vitotrol 200-E is connected to the HBMU. Check whether there is a short circuit at the PlusBus cable.

▶▶

Fault messages (cont.)

Displayed fault code	System characteristics	Cause	Measures
103	Normal operation	Internal communication error, programming unit	Check cables and plug-in connections between heat management unit and HMI programming unit.
104	Depending on configuration of EM-EA1 extension (DIO electronics module)	External fault message input active	Check connected external appliance.
142	Burner in a fault state	Communication restriction on CAN bus. INR	Check the fan unit for correct function. For this, check the stepper motor of the fan unit (reference run with mains ON). If the fault still persists, check the plug-in connections and cables of the CAN bus. Check further CAN bus subscribers. If fault occurs repeatedly, replace fan unit.
160	Burner in a fault state	Communication error, CAN bus	Check CAN bus subscriber connections (INR, HBMU). Check connections to external CAN bus subscribers.
161	Burner in a fault state	HBMU heat management unit data memory access fault	Reset the appliance. If the fault occurs repeatedly, replace the HBMU heat management unit. See chapter "Replacing the HBMU heat management unit".
163	Burner in a fault state	Checksum error, data memory access, HBMU heat management unit	Reset the appliance. If the fault occurs repeatedly, replace the HBMU heat management unit. See chapter "Replacing the HBMU heat management unit".
182	No DHW heating	Short circuit, outlet temperature sensor (if installed)	Check outlet temperature sensor (plug X7, cores 3 and 4). Measure sensor input on HBMU heat management unit. Set value: 3.3 V– with sensor disconnected
183	No DHW heating	Lead break, outlet temperature sensor (if installed)	Check outlet temperature sensor (plug X7, cores 3 and 4).
184	Burner in a fault state	Short circuit, flow temperature sensor/high limit safety cut-out	Check the flow temperature sensor/high limit safety cut-out. Check sensor lead. Replace faulty component if necessary. Reset the appliance.
185	Burner in a fault state	Lead break, flow temperature sensor/high limit safety cut-out	Check the flow temperature sensor/high limit safety cut-out. Replace faulty component if necessary. Reset the appliance.

Fault messages (cont.)

Displayed fault code	System characteristics	Cause	Measures
345	Burner locked out, automatic enabling after appliance cool-down. Independent restart	Temperature limiter has responded.	▪ Ensure adequate heat transfer. ▪ Check heating system fill level. ▪ Check pre-charge pressure in diaphragm expansion vessel. Adjust to required system pressure. ▪ Check whether flow rate is sufficient (pump). ▪ Check function of 3-way diverter valve. Vent the system. If the fault occurs during DHW heating: Check the DHW cylinder or plate heat exchanger for dirt and scaling.
346	Burner in a fault state	Ionisation current calibration error	▪ Check the gas supply pressure. ▪ Check gas solenoid valve inlet strainer for contamination. ▪ Check ionisation electrode for contamination. ▪ Check the flue system. Remove flue gas recirculation if necessary. ▪ Check the condensate drain (condensate backup). Reset the appliance.
348	Burner in a fault state	Gas modulation valve	If several heat generators are connected to a common flue system: Check whether **"Multiple connection"** is set in the commissioning assistant. Check the flue system for unrestricted flow. If fault remains, replace gas fan unit.
349	Burner in a fault state	Air mass rate flow not detected correctly in fan unit.	▪ Check for dust contamination in the ventilation air. ▪ Check burner gauze assembly for contamination. Reset the appliance. If the fault occurs repeatedly, replace the gas fan unit.
350, 351	Burner in a fault state	Ionisation current lies outside the permissible range	Replace the HBMU heat management unit. See chapter "Replacing the HBMU heat management unit".
352	Burner in a fault state	Combustion CO limit exceeded	Check entire flue gas path for the following: ▪ Leaks ▪ Flue gas back pressure caused by water pocket (if flue system fall is insufficient) ▪ Constrictions ▪ Blockages Repair flue system if necessary. Reset the appliance.

Fault messages (cont.)

Displayed fault code	System characteristics	Cause	Measures
353	Shutdown with restart if demand exists	Insufficient gas supply, burner output reduced	Check the gas supply. Visually inspect gas solenoid valve inlet strainer for contamination. Reset the appliance.
354	Burner in a fault state	Gas modulation valve tolerance outside permissible range	Replace gas fan unit.
355	Burner in a fault state	Analogue signal reference check: Flame signal is already present at burner start.	Replace the HBMU heat management unit. See chapter "Replacing the HBMU heat management unit".
357	Burner in a fault state	Insufficient gas supply	▪ Check that the main gas valve and the gas shut-off valve are open. ▪ Measure static gas pressure and gas flow pressure. ▪ Check that on-site gas line and gas flow switch are correctly sized. ***Note*** *If the building pressure regulator has a leak, you may notice rising pressure when the burner is idle. When the system is restarted, the gas flow switch may respond.* ▪ If the static pressure does not drop, check the cable to the fan unit. Check that the coil resistance at the fuel valve is approx. 4 kΩ (plug 35). ▪ Check the ignition electrode for damaged insulation. Reset the appliance.
359	Burner in a fault state	No ignition spark	▪ Check whether the ignition electrode insulation is damaged. ▪ Check for a voltage of 230 V~ at the ignition module during the ignition phase. If not, replace the HBMU heat management unit. ▪ If 230 V~ is present at the ignition module but there is still a fault, replace the ignition module. ▪ Check connecting cables and leads from ignition module and ignition electrode. Reset the appliance.

Fault messages (cont.)

Displayed fault code	System characteristics	Cause	Measures
361	Burner in a fault state	Flame signal is not present or insufficient at burner start.	Check ionisation electrode and connecting cable. Check plug-in connections for loose contacts. ***Note*** *Deposits on the electrodes indicate foreign bodies in the combustion air. Check the installation room and flue system for causes of the deposits. For example: Laundry detergents, cleaning agents, toiletries, deposits in the ventilation air supply (chimney)* Reset the appliance.
365	Burner in a fault state	Gas valve relay contact feedback implausible (relay contact is "welded up")	Replace the HBMU heat management unit.
366, 367	Burner in a fault state	Gas valve power supply does not turn off.	Replace the HBMU heat management unit. See chapter "Replacing the HBMU heat management unit".
369	Burner in a fault state	Flame is lost immediately after flame formation (during safety time)	Check gas supply (gas pressure and gas flow switch). Check balanced flue system for flue gas recirculation. Check ionisation electrode for the following: ▪ Distance to burner gauze assembly. ▪ Contamination on electrode Reset the appliance.
370	Burner in a fault state	Gas valve or modulation valve does not close.	Reset the appliance. If fault occurs repeatedly, replace fan unit.

Fault messages (cont.)

Displayed fault code	System characteristics	Cause	Measures
372	Burner in a fault state	Repeated flame loss during calibration	▪ Check ionisation electrode and connecting cable. ▪ Check plug-in connections for loose contacts. ▪ Check the flue system. Remove flue gas recirculation if necessary. ▪ Check system for condensate backup. ▪ Visually inspect gas solenoid valve inlet and inlet strainer for contamination. ***Note*** *To prevent water damage, detach fan unit before removing the burner. Deposits on the electrodes indicate foreign bodies in the combustion air.* Check the installation room and flue system for causes of the deposits. For example: Laundry detergents, cleaning agents, toiletries, deposits in the ventilation air supply (chimney). If burner gauze assembly and ionisation electrode have been replaced, also clean fan unit, gas/air channel and Venturi extension. Reset the appliance.
373	Burner in a fault state	Heat transfer too low during calibration Temperature limiter has shut down.	▪ Ensure adequate heat transfer. ▪ Check circulation pump for faults, scale or blockages. ▪ Check function of 3-way diverter valve. Vent the system. ▪ Check function of flow sensor. Reset the appliance.
377	Burner in a fault state	Post-processing of ionisation current calibration: Stabilisation conditions for post-calibration not met	Check gas type setting. If the fault occurs repeatedly, replace the HBMU heat management unit. See chapter "Replacing the HBMU heat management unit". Reset the appliance.
378	Burner in a fault state	Flame loss during stabilisation or operating phase	▪ Check gas supply (gas pressure and gas flow switch). ▪ Check flue gas recirculation. ▪ Check for contamination of ionisation electrode and burner gauze assembly. Reset the appliance.

Fault messages (cont.)

Displayed fault code	System characteristics	Cause	Measures
379	Burner in a fault state	Flame signal not present or insufficient	▪ Check ionisation electrode connecting cable for damage and firm seating. ▪ Check the ionisation electrode; replace if necessary. Reset the appliance.
380	Burner in a fault state	Flame is lost immediately after flame formation (during safety time)	Check gas supply (gas pressure and gas flow switch). Check balanced flue system for flue gas recirculation. Check ionisation electrode and burner gauze assembly: ▪ Clearance to burner gauze assembly ▪ Contamination on electrode Reset the appliance.
381	Burner in a fault state	Flame loss during operating phase	Check gas supply (gas pressure and gas flow switch). Check balanced flue system for flue gas recirculation. Check ionisation electrode and burner gauze assembly: ▪ Distance to burner gauze assembly. ▪ Contamination on electrode Reset the appliance.
382	Burner in a fault state	Fault counter has exceeded limit.	Reset the appliance. Work through fault analysis using fault history.
383, 384	Burner in a fault state	Possible contamination of gas line	▪ Check gas line for contamination. ▪ Check the gas supply pressure. ▪ Replace the gas fan if necessary. Reset the appliance.
385	Burner in a fault state	Short circuit, signal 1, ionisation current. HBMU heat management unit faulty.	Check IO electrode for earth fault. If the fault persists, replace the HBMU heat management unit. Reset the appliance.
386	Burner in a fault state	HBMU heat management unit faulty	Replace the HBMU heat management unit. See chapter "Replacing the HBMU heat management unit". Reset the appliance.
387	Burner in a fault state	Earth fault, ionisation current. HBMU heat management unit faulty.	Check ionisation electrode and connecting cable. If the fault persists, replace the HBMU heat management unit. See chapter "Replacing the HBMU heat management unit". Reset the appliance.
388	Burner in a fault state	HBMU heat management unit faulty	Replace the HBMU heat management unit. See chapter "Replacing the HBMU heat management unit". Reset the appliance.

▶▶

Fault messages (cont.)

Displayed fault code	System characteristics	Cause	Measures
395	Burner in a fault state	IO electrode earth fault, HBMU heat management unit faulty	Check ignition electrode for earth fault. If the fault persists, replace the HBMU heat management unit. Reset the appliance.
396	Burner in a fault state	HBMU heat management unit faulty	Replace the HBMU heat management unit. See chapter "Replacing the HBMU heat management unit". Reset the appliance.
399	Burner in a fault state	IO electrode earth fault, HBMU heat management unit faulty	Check IO electrode for earth fault. If the fault persists, replace the HBMU heat management unit. See chapter "Replacing the HBMU heat management unit". Reset the appliance.
400	Burner in a fault state	HBMU heat management unit faulty	Replace the HBMU heat management unit. See chapter "Replacing the HBMU heat management unit". Reset the appliance.
401	Burner in a fault state	IO electrode earth fault, HBMU heat management unit faulty	Check IO electrode for earth fault. If the fault persists, replace the HBMU heat management unit. See chapter "Replacing the HBMU heat management unit". Reset the appliance.
402	Burner in a fault state	HBMU heat management unit faulty	Replace the HBMU heat management unit. See chapter "Replacing the HBMU heat management unit". Reset the appliance.
403	Burner in a fault state	Ionisation electrode earth fault, HBMU heat management unit faulty	Check IO electrode for earth fault. If the fault persists, replace the HBMU heat management unit. See chapter "Replacing the HBMU heat management unit". Reset the appliance.
404	Burner in a fault state	HBMU heat management unit faulty	Replace the HBMU heat management unit. See chapter "Replacing the HBMU heat management unit". Reset the appliance.
405	Burner in a fault state	Ionisation electrode earth fault, HBMU heat management unit faulty	Check IO electrode for earth fault. If the fault persists, replace the HBMU heat management unit. See chapter "Replacing the HBMU heat management unit". Reset the appliance.
406, 408, 410	Burner in a fault state	HBMU heat management unit faulty	Replace the HBMU heat management unit. See chapter "Replacing the HBMU heat management unit". Reset the appliance.
416	Burner locked out	Flue gas temperature sensor incorrectly positioned	Fit flue gas temperature sensor correctly. See "Repairs". Carry out mains reset after fault has been remedied.

Fault messages (cont.)

Displayed fault code	System characteristics	Cause	Measures
417, 418	Burner in a fault state	HBMU heat management unit faulty	Replace the HBMU heat management unit. See chapter "Replacing the HBMU heat management unit". Reset the appliance.
425	System in normal operation, calculation out of operation. Calculation values can be viewed via software tool.	Time synchronisation failed	Set the time.
446	Burner in a fault state	Deviation, heat generator flow temperature sensor/ high limit safety cut-out	Check the flow temperature sensor/high limit safety cut-out. Check plug-in connection and lead to sensor. Reset the appliance.
447, 448	Burner in a fault state	Deviation, ionisation voltage/ionisation current signal	Replace the HBMU heat management unit. See chapter "Replacing the HBMU heat management unit". Reset the appliance.
449, 450, 451, 452	Burner in a fault state	Error in scheduled program run monitoring	Reset the appliance. If the fault occurs repeatedly, replace the HBMU heat management unit. See chapter "Replacing the HBMU heat management unit".
453	Burner in a fault state	Synchronisation error, sequence	Reset the appliance. If the fault occurs repeatedly, replace the HBMU heat management unit. See chapter "Replacing the HBMU heat management unit".
454	Burner in a fault state	Incorrect HBMU heat management unit parameter set	Flash correct HBMU heat management unit parameter set.
455, 456	Burner in a fault state	Error in program run monitoring	Reset the appliance. If the fault occurs repeatedly, replace the HBMU heat management unit. See chapter "Replacing the HBMU heat management unit".
457	Burner in a fault state	Fan sluggish or blocked.	Reset the appliance. Check fan for sluggishness. In the case of severe contamination or grinding noises, replace fan unit.

Fault messages (cont.)

Displayed fault code	System characteristics	Cause	Measures
463	Burner in a fault state	Contaminated combustion air, flue gas recirculation	Check flue system for contamination and flue gas recirculation. Clean the flue system if necessary. Reset the burner. ***Note*** *Deposits on the electrodes indicate foreign bodies in the combustion air. Check the installation room and flue system for causes of the deposits. For example: Laundry detergents, cleaning agents, toiletries, deposits in the ventilation air supply (chimney).* *If burner gauze assembly and ionisation electrode have been replaced, also clean fan unit, gas/air channel and Venturi extension.* *Reset the appliance.*
464	Burner in a fault state	Ionisation current too low during calibration. Differential compared to previous value not plausible	▪ Check ionisation electrode and connecting cable. Check plug-in connections for loose contacts. ▪ Check whether there is a lot of dust in the ventilation air (e.g. from construction work). ▪ Check the flue system. Remove flue gas recirculation if necessary. ▪ Check system for condensate backup. Reset the appliance. ***Note*** *To prevent water damage, detach fan unit before removing the burner.* If the fault is constant, replace the HBMU heat management unit: See chapter "Replacing the HBMU heat management unit". ***Note*** *Deposits on the electrodes indicate foreign bodies in the combustion air. Check the installation room and flue system for causes of the deposits. For example: Laundry detergents, cleaning agents, toiletries, deposits in the ventilation air supply (chimney).* *If burner gauze assembly and ionisation electrode have been replaced, also clean fan unit, gas/air channel and Venturi extension.*

Fault messages (cont.)

Displayed fault code	System characteristics	Cause	Measures
467	Burner in a fault state	Gas supply insufficient during calibration. Contaminated or insufficiently sized gas line.	▪ Test static gas pressure and gas flow pressure. ▪ Check that on-site gas line and gas flow switch are correctly sized. ▪ Visually inspect gas solenoid valve inlet and inlet strainer for contamination. Reset the appliance. ***Note*** *Contamination from a brazed gas line, for example, can block up the gas solenoid valve strainer on the inlet side.*
468	Burner in a fault state	Ionisation current too high during calibration	Check gap between ionisation electrode and burner gauze assembly. Check whether there is a lot of dust in the ventilation air (e.g. from construction work). Reset the appliance. ***Note*** *Deposits on the electrodes indicate foreign bodies in the ventilation air. Check the installation room and flue system for causes of the deposits. For example: Laundry detergents, cleaning agents, toiletries, deposits in the ventilation air supply (chimney).* *If burner gauze assembly and ionisation electrode have been replaced, also clean fan unit, gas/air channel and Venturi extension.*
471	No heat demand	System pressure sensor not available, lead break or short circuit	▪ Check system pressure sensor (plug 163). ▪ Check lead and plug-in connection. ▪ Measure the supply voltage to the sensor to see if it is 5 V–.
474	Burner in a fault state	Error in scheduled program run monitoring	Reset the appliance. If the fault occurs repeatedly, replace the HBMU heat management unit. See chapter "Replacing the HBMU heat management unit".
517	Normal operation, remote control not functioning	Lead break, PlusBus cable, incorrect appliance address set, remote control faulty	▪ Check the setting in the commissioning assistant. Correct if necessary. ▪ Check remote control cable. ▪ Check remote control subscriber number. Replace faulty remote control if applicable.

▶▶

Fault messages (cont.)

Displayed fault code	System characteristics	Cause	Measures
527, 528	Burner in a fault state	Incorrect HBMU heat management unit parameter set	Overwrite (flash) the HBMU heat management unit with the correct parameter set.
540	Burner in a fault state	Condensate backup in the heat cell	▪ Check system for condensate backup. ▪ Check the condensate drain and trap. ▪ Replace insulation blocks, electrodes and burner gauze assembly if necessary. ***Note*** *To prevent water damage, detach fan unit before removing the burner.* Reset the appliance.
544	Emergency function operating mode is activated for heating circuit 2: Mixer closes. Heating circuit pump is operational.	Lead break, flow temperature sensor, heating circuit 2 with mixer Incorrect setting during commissioning	Check flow temperature sensor, mixer 2. Measure voltage at sensor input on electronics module. Set value: 3.3 V– with sensor disconnected Check the setting in the commissioning assistant. Correct if necessary. Checking setting of ADIO rotary switch.
545	Emergency function operating mode is activated for heating circuit 2: Mixer closes. Heating circuit pump is operational.	Short circuit, flow temperature sensor for heating circuit 2 with mixer	Check flow temperature sensor, mixer 2. Measure voltage at sensor input on electronics module. Set value: 3.3 V– with sensor disconnected
738	Normal operation	OpenTherm remote control connected but not configured	Set C.7 in the commissioning assistant to a value of 14.

Repairs

! **Please note**
Residual water will escape when the boiler or one of the following components is fitted or removed:
- Water-filled pipework
- Heat exchanger
- Circulation pumps
- Plate heat exchanger
- Components fitted in the heating water circuit.

Water ingress can result in damage to other components.

Protect the following components against ingress of water:
- Control unit components (in particular in the service position)
- Electrical components
- Plug-in connections
- Electrical cables/leads

Shutting down the boiler

1. Turn off the power supply at the ON/OFF switch.
2. Shut off the gas supply.
3. If the boiler needs to be removed:
   - Isolate the system from the power supply, e.g. by removing the separate fuse or by means of a mains isolator, and check that it is no longer live.
   - Safeguard the system against reconnection.
   - Disconnect the balanced flue system.
   - Drain the boiler on the heating water side.
   - Disconnect the on-site cables/leads.

Repairs (cont.)

Removing the boiler from the pre-plumbing jig

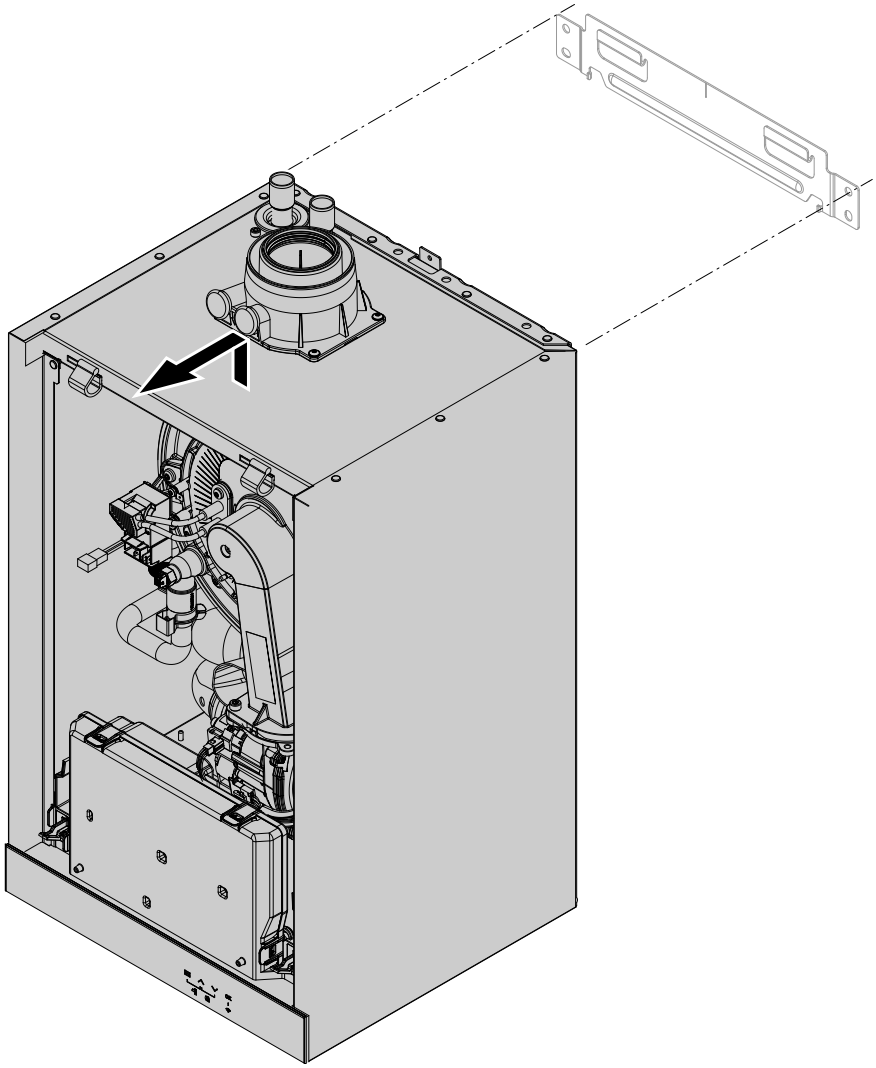

Fig. 32

Note
When assembling, use new gaskets and – if necessary – new locking ring fittings:
Gas connection Ø 18.5 mm
Gaskets and locking ring connections are available as individual parts (if required).

Note
When carrying out any work on gas connection fittings, hold with a suitable tool. Never transfer any forces to the internal components.

Danger
Escaping gas leads to a risk of explosion.
Check all connections on the gas side (also inside the appliance) for tightness.

Repairs (cont.)

Checking the temperature sensors

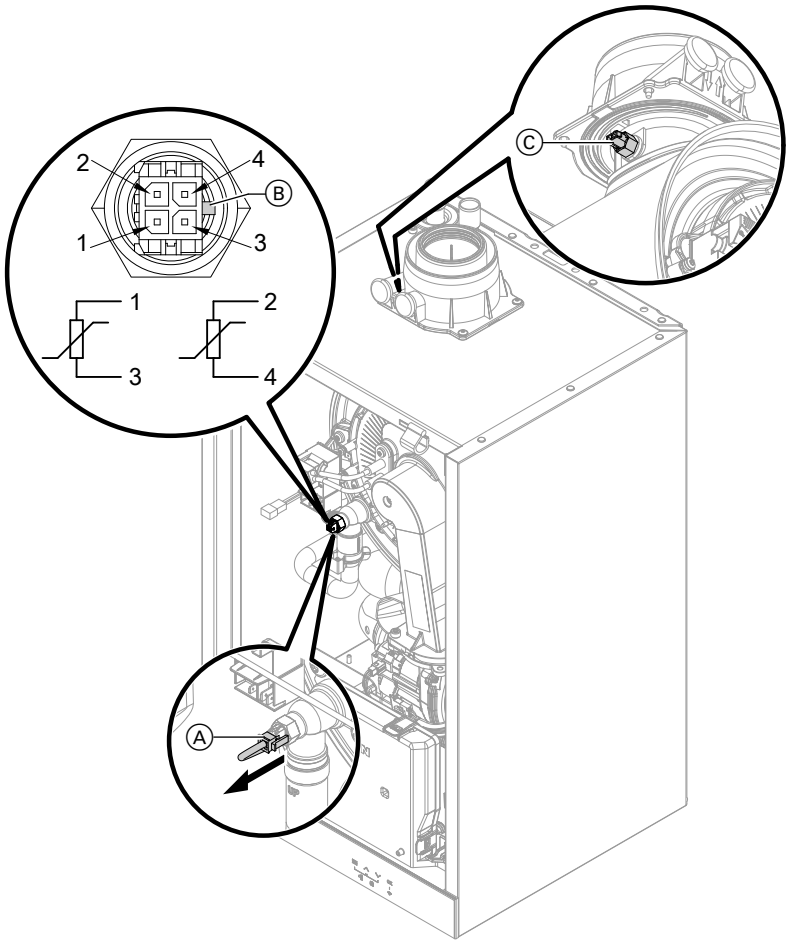

Fig. 33

Heat generator circuit flow temperature sensor (dual sensor)

1. Check the leads and plugs of flow temperature sensors Ⓐ.

2. Disconnect the leads from flow temperature sensors Ⓐ.

3. Check the sensor resistance. Note position of guide lug Ⓑ.
   - Sensor 1: Connections 1 and 3
   - Sensor 2: Connections 2 and 4

   Compare the resistances with the value for the current temperature from the following diagram. In the event of severe deviation (> 10 %), replace the dual sensor.

   ⚠ **Danger**
   The dual sensor is directly immersed in the heating water (risk of scalding).
   Drain the boiler on the heating water side before replacing the sensor.

   ⚠ **Danger**
   Risk of electric shock from escaping heating water
   Check the dual sensor for leaks.

Outside temperature sensor

1. Check the lead and plug of the outside temperature sensor.

Repairs (cont.)

2. Disconnect wires 3 and 4 from terminal O.T.S.

3. Check the sensor resistance. Compare the resistance with the value for the current temperature from the following diagram.
   If the results are very different from the curve (> 10 %), disconnect the wires from the sensor. Repeat the test directly on the sensor.
   Check the on-site lead. 2-core lead, up to 35 m long with 1.5 mm^2 cross-section
   Depending on the test result, replace the lead or the outside temperature sensor.

Flue gas temperature sensor

1. Check the lead and plug of flue gas temperature sensor Ⓒ.

2. Disconnect leads, flue gas temperature sensor Ⓒ.

3. Rotate sensor (anti-clockwise) by ¼ turn to remove it (bayonet fitting).

4. Check the sensor resistance. Compare the resistance with the value for the currently recorded temperature from the following diagram.
   In the event of severe deviation (> 10 %), replace the sensor.

5. Rotate sensor (clockwise) by ¼ turn to install it.

   ⚠ **Danger**
   Escaping flue gas can cause poisoning.
   When restarting, check for leaks on the flue gas side.

6. Reconnect leads, flue gas temperature sensor Ⓒ.

7. If the permissible flue gas temperature has been exceeded, the flue gas temperature sensor locks out the appliance. Reset the burner on the programming unit once the flue system has cooled down.

- Flue gas temperature sensor
- Flow temperature sensor
- Outlet temperature sensor

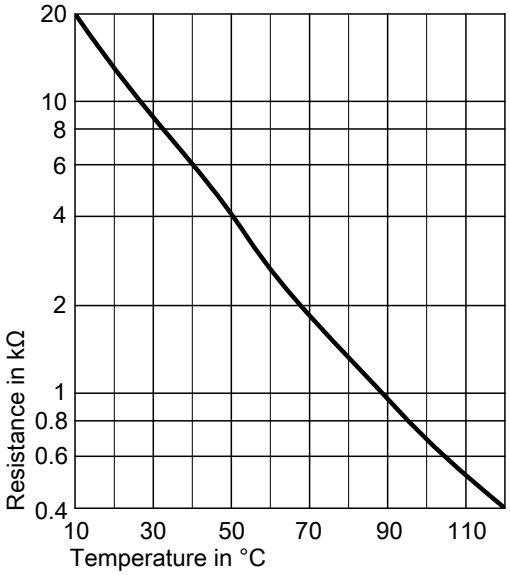

Sensor type: NTC 10 kΩ

- Outside temperature sensor

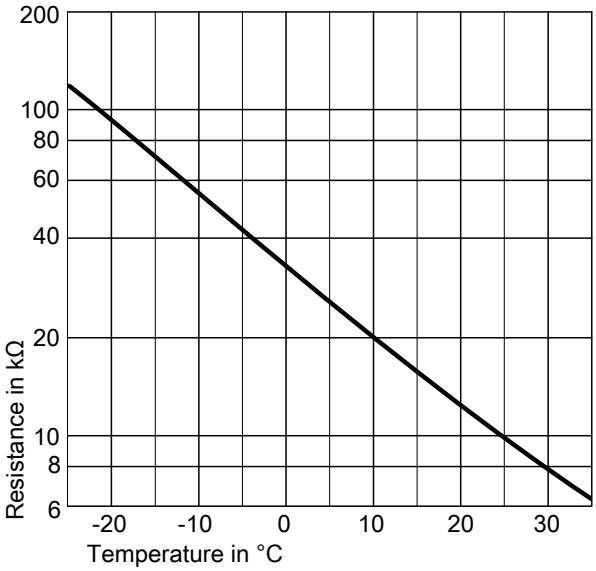

Sensor type: NTC 10 kΩ

Fault during commissioning (fault message 416)

During commissioning, the control unit checks for correct placement of the flue gas temperature sensor. If fault message 416 is displayed:

1. Check whether the flue gas temperature sensor is correctly installed (bayonet fitting). See previous diagram.

2. If required, correct the position of the flue gas temperature sensor.

3. Check the flue gas temperature sensor resistance. See previous chapter. Replace faulty flue gas temperature sensor if required.

4. Turn off the ON/OFF switch.

5. Turn the ON/OFF switch back on.
   Restart the commissioning assistant.

6. Check for leaks on the flue gas side.

Repairs (cont.)

Note
If fault message 416 continues to be displayed although the flue gas temperature sensor is correctly positioned: Initial commissioning may result in burner faults e.g. caused by air in the gas line. Eliminate the fault and reset the appliance.

Information on replacing the HBMU heat management unit

If replacing the HBMU heat management unit, "Vitoguide" must be used.

See spare part installation instructions and internet address: **"www.vitoguide.info"**

Replacing the power cable

When replacing the power cable, only use the power cable available as an individual part from Viessmann.

Replacing the HMI connecting cable

! **Please note**
Incorrect routing of the cable can lead to heat damage and impairment of the EMC properties. For positioning and securing of the cable (fixing point of the cable tie) see connecting cable installation instructions.

Checking the fuse

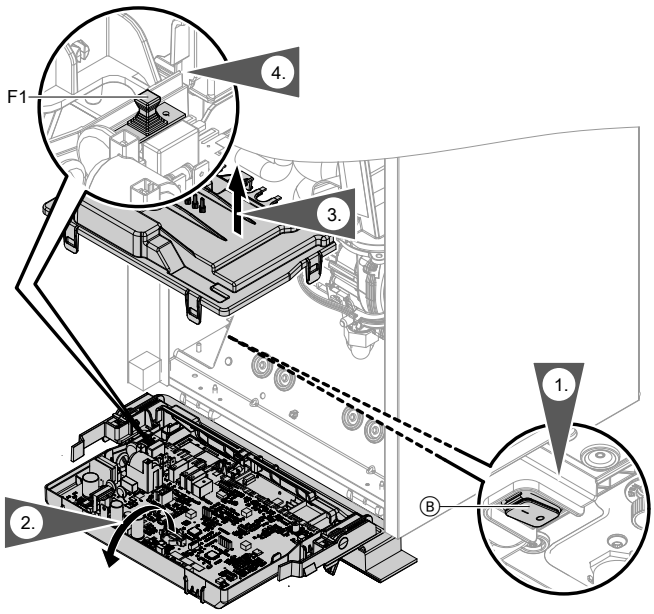

Fig. 34

1. Turn off the ON/OFF switch Ⓑ.
2. Remove the programming unit.
3. Pivot the HBMU heat management unit down.
4. Remove cover Ⓐ.
5. Check fuse F1 (see connection and wiring diagram).

Danger
Incorrect or improperly fitted fuses can lead to an increased risk of fire.
- Insert fuses without using any force. Position fuses correctly.
- Only use structurally identical types with the specified response characteristics.

Appliance functions

Heating mode

- **Weather-compensated operation:**
  The rooms are heated in accordance with the room temperature settings.
  The control unit determines a set flow temperature for the heat generator, subject to the outside temperature, the room temperature and the slope/level of the heating curve.
- **Room temperature-dependent operation (constant operation with room thermostat):**
  System with one heating circuit without mixer. The rooms are heated in accordance with the settings of the room temperature controller/room thermostat (accessories).
  If the room temperature controller/room thermostat issues a demand, the standard set flow temperature is maintained. If there is no demand, the frost protection function is active.
- **Constant operation without room thermostat:**
  The rooms are heated according to the set flow temperature settings.

Heating curve

The heating curves represent the relationship between the outside temperature and the flow temperature. Simplified: The lower the outside temperature, the higher the flow temperature must be in order to reach the set room temperature.

Factory settings:
- Slope = 1.4
- Level = 0

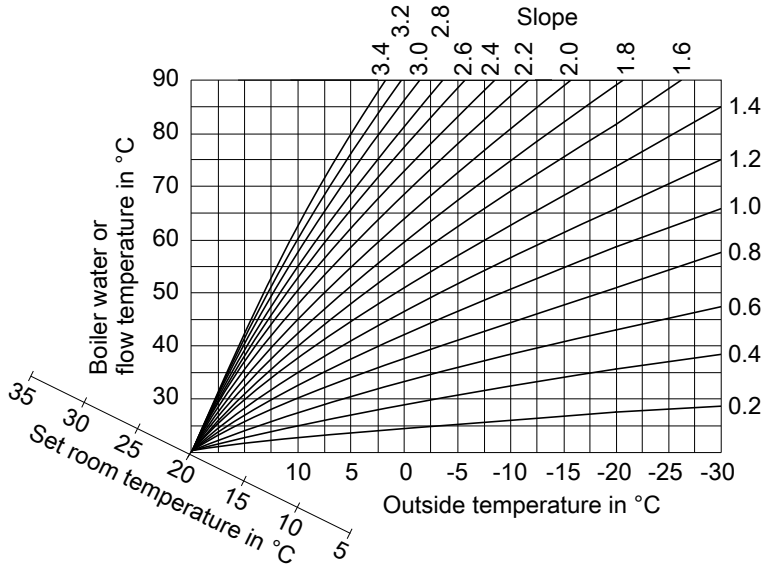

Fig. 35

Slope setting ranges:
- Underfloor heating systems: 0.2 to 0.8
- Low temperature heating systems: 0.8 to 1.6

Set room temperature

Standard room temperature

Individually adjustable for each heating circuit.

Appliance functions (cont.)

The heating curve is offset along the set room temperature axis. The start and stop points of the heating circuit pumps depend on the Heating limit, outside temperature for heating circuit... setting.

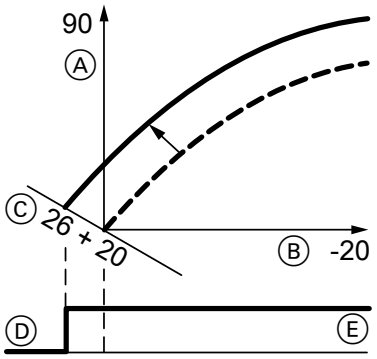

Fig. 36 Example 1: Changing the set room temperature from 20 to 26 °C

Ⓐ Flow temperature in °C
Ⓑ Outside temperature in °C
Ⓒ Set room temperature in °C
Ⓓ Heating circuit pump "OFF"
Ⓔ Heating circuit pump "ON"

Changing the set room temperature

Operating instructions

Changing the slope and level

Individually adjustable for each heating circuit.

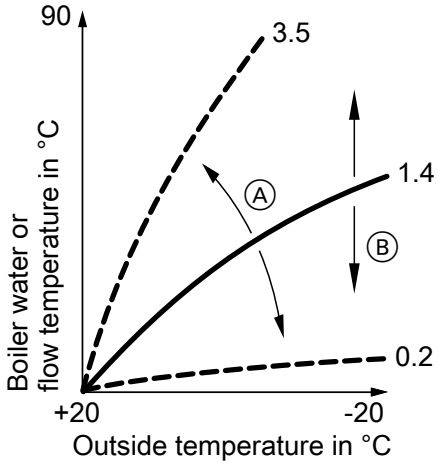

Fig. 37

Ⓐ Changing the slope
Ⓑ Changing the level (vertical parallel offset of the heating curve)

External heating circuit hook-up (if installed)

Note
Only in conjunction with weather-compensated mode

- Function:
  - If the external demand is active, the heating circuit is supplied with heat.
  - If the external demand is inactive (contact open), heat supply to the heating circuit ends (regardless of the current set room temperature or the switching time).

    Please note

    There is no frost protection for the connected heating circuits.
- Connection:
  - If only one heating circuit is hooked up, use connection at plug 96: See page 72.

HBMU heat management unit

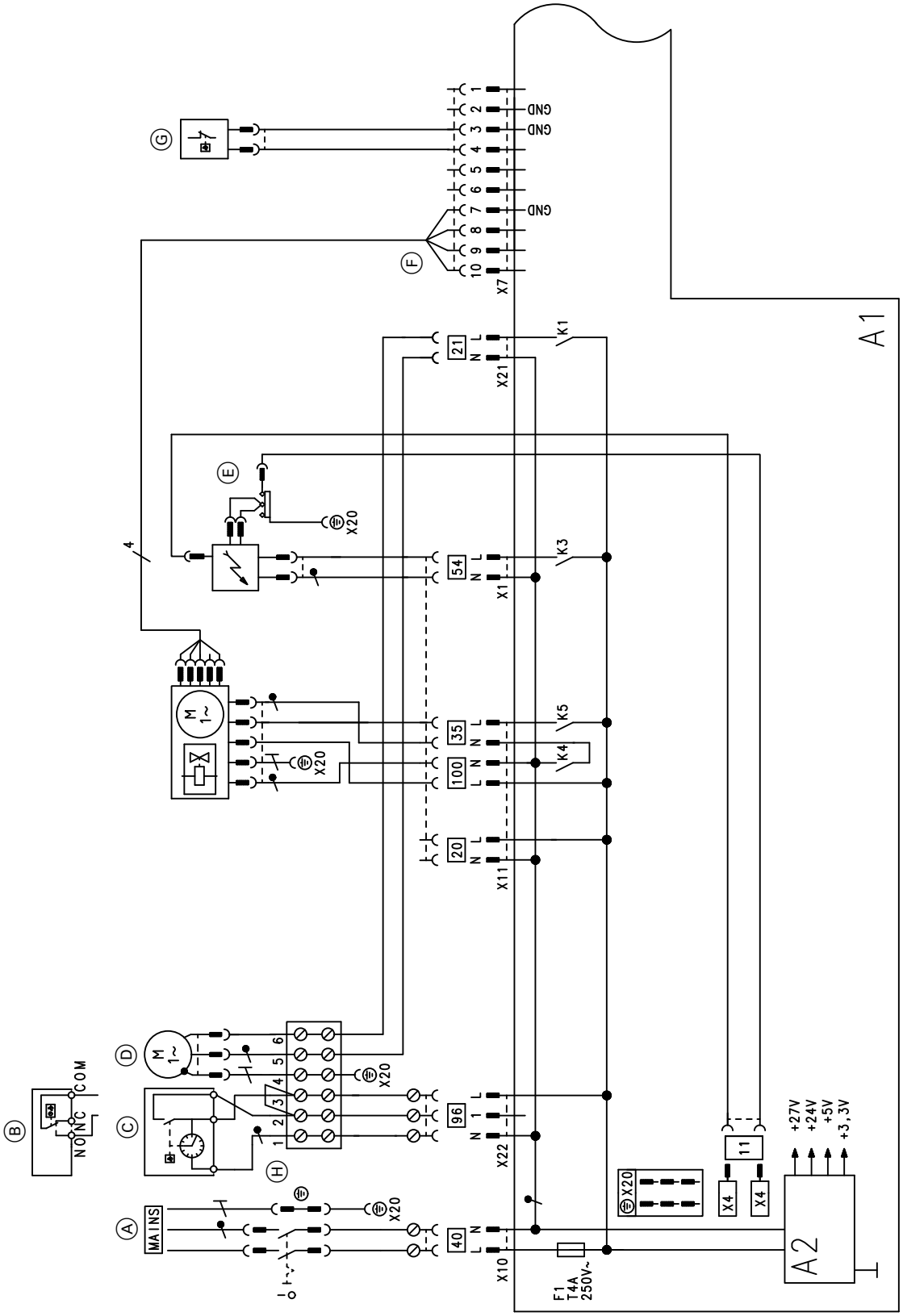

Fig. 38

A1 HBMU heat management unit
A2 Power supply unit
X... Electrical interfaces
Ⓐ Power supply 230 V/50 Hz
Ⓑ Vitotrol 100, type UTDB
Ⓒ Vitotrol 100, type UTA
Ⓓ External connection for 230 V circulation pump
Ⓔ Ignition/ionisation
Ⓕ Fan control
Ⓖ Cylinder demand junction box
Ⓗ Remove jumper across terminals 2 and 3 when making a connection.
96 230 V connection accessories for accessories
20 No function

6194585

HBMU heat management unit (cont.)

100 230 V fan motor
35 Gas solenoid valve
54 Ignition unit
40 Mains input
21 Heating circuit pump

(cont.)

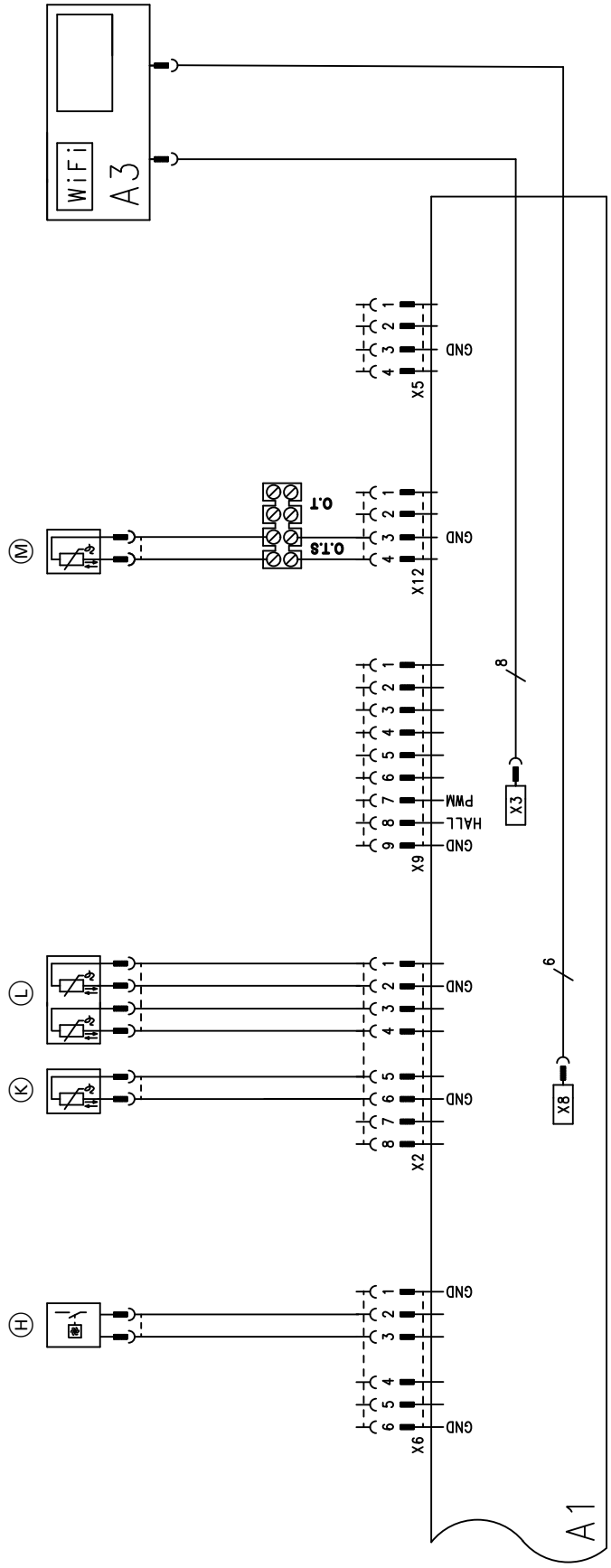

Fig. 39

A1 HBMU heat management unit
A3 Programming unit
X... Electrical interfaces
Ⓗ Flow switch
Ⓚ Flue gas temperature sensor
Ⓛ Boiler water temperature sensor
Ⓜ Outside temperature sensor

6194585

(cont.)

Settings and test values		Set value	Commission-ing	Maintenance/ service	Maintenance/ service
Date					
Signature					
Static pressure	mbar kPa	≤ 57.5 ≤ 5.75			
Supply pressure (flow pressure)					
☐ For natural gas	mbar kPa	See table "Supply pressure" (Commissioning ...)			
☐ For LPG	mbar kPa				
☐ *Enter gas type*					
Carbon dioxide content CO_2 For natural gas					
▪ At lower heating output	% by vol.	See "Checking the combustion quality" (Commissioning ...)			
▪ At upper heating output	% by vol.				
For LPG					
▪ At lower heating output	% by vol.				
▪ At upper heating output	% by vol.				
Oxygen content O_2					
▪ At lower heating output	% by vol.				
▪ At upper heating output	% by vol.				
Carbon monoxide content CO					
▪ At lower heating output	ppm	< 1000			
▪ At upper heating output	ppm	< 1000			

Appendix

6194585

Gas condensing boiler

Gas boiler, type B and C, category I_{2N}/I_{2H}						
Type		**B1GA**				
Rated heating output range (details to EN 15502)						
T_F/T_R = 50/30 °C						
Natural gas	**kW**	**3.2 to 11**	**3.2 to 16**	**3.2 to 19**	**3.2 to 25**	**3.2 to 32**
LPG	**kW**	**3.2 to 11**	**3.2 to 16**	**3.2 to 19**	**3.2 to 25**	**3.2 to 32**
T_F/T_R = 80/60 °C						
Natural gas	**kW**	**2.9 to 9.9**	**2.9 to 14.4**	**2.9 to 17.0**	**2.9 to 22.5**	**2.9 to 28.7**
LPG	**kW**	**2.9 to 9.9**	**2.9 to 14.4**	**2.9 to 17.0**	**2.9 to 22.5**	**2.9 to 28.7**
Rated heat input (Qn)						
Natural gas	kW	3 to 10.4	3 to 15.1	3 to 18.0	3 to 23.6	3 to 30.2
LPG	kW	3 to 10.4	3 to 15.1	3 to 18.0	3 to 23.6	3 to 30.2
Product ID		CE-0063DL3422				
IP rating to EN 60529		IP X4 to EN 60529				
NO_x		6	6	6	6	6
Gas supply pressure						
Natural gas	mbar	20	20	20	20	20
	kPa	2	2	2	2	2
LPG	mbar	50	50	50	50	50
	kPa	5	5	5	5	5
Max. permiss. gas supply pressure[*1]						
Natural gas	mbar	25	25	25	25	25
	kPa	2.5	2.5	2.5	2.5	2.5
LPG	mbar	25 to 57.5	25 to 57.5	25 to 57.5	25 to 57.5	25 to 57.5
	kPa	2.5 to 5.75	2.5 to 5.75	2.5 to 5.75	2.5 to 5.75	2.5 to 5.75
Sound power level (to EN ISO 15036-1)						
▪ At partial load	dB(A)	33	33	33	33	33
▪ At rated heating output	dB(A)	41	44	46	49	52
Power consumption (in the delivered condition)	W	38	42	45	64	110
Rated voltage	V	230				
Rated frequency	Hz	50				
Appliance fuse protection	A	4.0				
Backup fuse (power supply)	A	16				
Electronic temperature limiter setting (TN)	°C	91				
Electronic temperature cut-out setting	°C	110				
Permissible ambient temperature						
▪ During operation	°C	+5 to +40				
▪ During storage and transport	°C	-5 to +60				
Weight						
▪ Excl. heating water and packaging	kg	23	23	23	23	26
▪ Incl. heating water	kg	25	25	25	25	28

*[*1] If the gas supply pressure is higher than the maximum permissible value, install a separate gas pressure governor upstream of the system.*

6194585

Gas condensing boiler (cont.)

Gas boiler, type B and C, category I_{2N}/I_{2H}						
Type		**B1GA**				
Rated heating output range (details to EN 15502)						
T_F/T_R = 50/30 °C						
Natural gas	**kW**	**3.2 to 11**	**3.2 to 16**	**3.2 to 19**	**3.2 to 25**	**3.2 to 32**
LPG	**kW**	**3.2 to 11**	**3.2 to 16**	**3.2 to 19**	**3.2 to 25**	**3.2 to 32**
T_F/T_R = 80/60 °C						
Natural gas	**kW**	**2.9 to 9.9**	**2.9 to 14.4**	**2.9 to 17.0**	**2.9 to 22.5**	**2.9 to 28.7**
LPG	**kW**	**2.9 to 9.9**	**2.9 to 14.4**	**2.9 to 17.0**	**2.9 to 22.5**	**2.9 to 28.7**
Water capacity (excl. diaphragm expansion vessel)	l	3	3	3	3	3
Max. flow temperature	°C	82	82	82	82	82
Nominal circulating water volume At T_F/T_R = 80/60 °C	l/h	434	633	752	988	1259
Permiss. operating pressure	bar MPa	3 0.3	3 0.3	3 0.3	3 0.3	3 0.3
Connections (with connection accessories)						
Boiler flow and return	R	¾	¾	¾	¾	¾
Dimensions						
▪ Length	mm	285	285	285	285	340
▪ Width	mm	375	375	375	375	375
▪ Height	mm	600	600	600	600	600
Gas connection	R	¾	¾	¾	¾	¾
Supply values Relative to the max. load and 1013 mbar/15 °C						
▪ Natural gas E	m^3/h	1.1	1.6	1.88	2.48	3.16
▪ Natural gas LL	m^3/h	1.3	1.86	2.19	2.88	3.68
▪ LPG	kg/h	0.81	1.17	1.4	1.83	2.35
Flue gas parameters						
Temperature (at a return temperature of 30 °C)						
▪ At rated heating output	°C	39	40	41	46	59
▪ At partial load	°C	38	38	38	38	38
Temperature (at a return temperature of 60 °C, for DHW heating)	°C	64	64	65	67	72
Available draught	Pa mbar	250 2.5	250 2.5	250 2.5	250 2.5	250 2.5
Available draught for B23P	Pa mbar	232 2.32	400 4	527 5.27	698 6.98	635 6.35
Max. amount of condensate To DWA-A 251	l/h	2.5	2.5	2.5	3.3	4.2
Condensate connection (hose nozzle)	Ø mm	20 to 24	20 to 24	20 to 24	20 to 24	20 to 24
Flue gas connection	Ø mm	60	60	60	60	60

Gas condensing boiler (cont.)

Gas boiler, type B and C, category I_{2N}/I_{2H}						
Type		**B1GA**				
Rated heating output range (details to EN 15502)						
T_F/T_R = 50/30 °C						
Natural gas	**kW**	**3.2 to 11**	**3.2 to 16**	**3.2 to 19**	**3.2 to 25**	**3.2 to 32**
LPG	**kW**	**3.2 to 11**	**3.2 to 16**	**3.2 to 19**	**3.2 to 25**	**3.2 to 32**
T_F/T_R = 80/60 °C						
Natural gas	**kW**	**2.9 to 9.9**	**2.9 to 14.4**	**2.9 to 17.0**	**2.9 to 22.5**	**2.9 to 28.7**
LPG	**kW**	**2.9 to 9.9**	**2.9 to 14.4**	**2.9 to 17.0**	**2.9 to 22.5**	**2.9 to 28.7**
Ventilation air connection	Ø mm	100	100	100	100	100
Standard seasonal efficiency [to DIN] at						
T_F/T_R = 40/30 °C	%	Up to 98 (H_s) [gross cv]				
Energy efficiency class		A	A	A	A	A

Note
The supply values are only for reference (e.g. in the gas contract application) or for a supplementary, rough estimate to check the volumetric settings. Due to factory settings, the gas pressure must not be altered from these values. Reference: 15 °C, 1013 mbar (101.3 kPa).

Flue system types

Available in the following countries	Flue system types
AE, AM, AT, AZ, BA, BG, BY, CH, CY, CZ, DK, EE, ES, FI, FR, GB, GR, HR, HU, IE, IS, IT, KG, KZ, LT, LV, MD, ME, MT, NL, NO, PL, PT, RO, RS, RU, SE, SK, TR, UA, UZ	B_{23}, B_{23P}, B_{33}, C_{13}, C_{33}, C_{53}, C_{63}, C_{83}, C_{83P}, C_{93}
AU, BE, NZ	B_{23}, B_{23P}, B_{33}, C_{13}, C_{33}, C_{53}, C_{83}, C_{83P}, C_{93}
DE, LU, SI	B_{23}, B_{23P}, B_{33}, C_{13X}, C_{33X}, C_{53X}, C_{63X}, C_{83X}, C_{93X}
CN	C13

Gas categories

Available in the following countries	Gas categories
AE, AM, AT, DK, EE, KG, LV, LU, LT, RO, RU, SE, AZ, BA, BG, BY, CH, CZ, ES, FI, GB, GR, HR, IE, IS, KZ, IT, MD, ME, NO, PT, RS, SI, SK, TR, UZ, HU, MT, UA	II_{2N3P}/II_{2H3P}
AU, BE, NZ	I_{2N}
DE, FR	II_{2N3P}
CY	I_{3P}
NL	II_{2EK3P}
PL	II_{2N3P}/II_{2ELw3P}
CN	12T

The gas condensing boiler is suitable for operation with a hydrogen blend of up to 20 % by volume.

Electronic combustion control unit

The electronic combustion controller utilises the physical correlation between the level of the ionisation current and the air ratio λ. The maximum ionisation current is achieved at an air ratio of 1 for all gas qualities. The ionisation signal is evaluated by the combustion controller. The air ratio is regulated to a value that is between λ= 1.2 and 1.5. This range provides for an optimum combustion quality. Thereafter, the electronic gas train regulates the required gas volume subject to the prevailing gas quality.
To check the combustion quality, the CO_2 content or the O_2 content of the flue gas is measured. The prevailing air ratio is determined using the actual values.

To achieve optimum combustion control, the system regularly carries out an automatic self-calibration; also after power failures (shutdown). For this, the combustion is briefly regulated to maximum ionisation current (corresponding to air ratio λ=1). Self-calibration takes place shortly after the burner starts. The process lasts approx. 20 s during which higher than normal CO emissions may occur briefly.

Final decommissioning and disposal

Viessmann products can be recycled. Components and substances from the system are not part of ordinary domestic waste.

For decommissioning, isolate the system from the power supply and allow components to cool down where appropriate.
All components must be disposed of correctly.

Declaration of conformity

We, Viessmann Climate Solutions SE, D-35108 Allendorf, declare as sole responsible body that the named product complies with the European directives and supplementary national requirements in terms of its design and operational characteristics. Viessmann Climate Solutions SE, D-35108 Allendorf, hereby declares that the radio equipment type of the named product is in compliance with Directive 2014/53/EU.

Using the serial number, the full Declaration of Conformity can be found on the following website:
www.viessmann.co.uk/eu-conformity

Keyword index

B
Boiler water temperature sensor....67
Burner gasket....37
Burner gauze assembly....37
Burner installation....40
Burner removal....36
Burner reset....49

C
Combustion chamber, cleaning....38
Combustion controller....79
Combustion quality, checking....41
Commissioning....30
Commissioning assistant....29
Condensate connection....21
Condensate drain....39
Connection schemes....72
Control unit
– Connection diagram....72
Control unit, opening....23
Control unit functions....70

D
Dimensions....12

E
Electronic combustion controller....79

F
Fault codes....50
Fault message, calling up....49
Fault messages
– Display....49
Faults
– Commissioning....34
– Display....49
Fill water....30
Flow pressure....33
Flow temperature sensor....67
Flue gas connection....22
Flue gas temperature sensor....68
Front panel removal....18
Function descriptions....70
Function sequence....34
Fuse....69

G
Gas connection....22
Gas solenoid valve....33
Gas supply pressure....33
Gas type....31

H
Heating curve....43, 70
Heating curve level....71
Heating curve slope....71
Heating output setting....35
Heating surface, cleaning....38
Heating system, venting....31
Heating water side connections....20

I
Ignition....38
Ignition electrodes....38
Installation preparation....12
Intended use....9
Internet, connecting....30
Ionisation electrode....38

L
Language selection....29
Leak test, balanced flue system....35

M
Mains isolator....32, 36, 41
Message history....49

O
Operating conditions, checking....47
Operating data, calling up....47
Operating data, checking....47
Outside temperature sensor....25, 67

P
Parameter
– Frost protection configuration, heating circuit 1....46
Parameters....44
– Adjusting....44
– Calling up....44
– Energy saving functions, heating circuit....45
– Heating limit: Economy function, outside temperature, heating circuit 1....45
– Maximum flow temperature limit, heating circuit 1 . 45
– Maximum heating output....44
– Minimum heating output....44
– Pump activation, heating circuit pump in standby mode....45
– Scald protection activation....44
Parameters for commissioning....43

R
Repairs....65
Report....75
Room temperature, set
– Setting....70

S
Seal rings, replacing....31
Service menu....47
– Calling up....47
– Exiting....47
Static pressure....33
Subscriber number of connected component....49
Summer economy control....45
Supply pressure....32, 33
System configuration....29, 44
System schemes....43

6194585

Keyword index (cont.)

T
Tightness test.....31
Trap.....22, 39
Type plate.....10

W
Wall mounting.....16
WiFi connection.....30
WiFi network..... 30
Wiring diagram.....72

6194585

Viessmann Climate Solutions SE
35108 Allendorf / Germany
Telephone: +49 6452 70-0
Fax: +49 6452 70-2780
www.viessmann.com

Viessmann Limited
Hortonwood 30, Telford
Shropshire, TF1 7YP, GB
Telephone: +44 1952 675000
Fax: +44 1952 675040
E-mail: info-uk@viessmann.com

6194585 Subject to technical modifications.