TC7X Ethernet Cup Conversion Installation Instructions

NOTE: This rework activity must be performed by the qualified technician or engineer in an ESD safe workstation. The technician or engineer must wear a grounded ESD strap.

1. Remove the AC power from the cradle.
2. Remove the screw securing the ethernet cup to the cradle using a Phillips screwdriver.

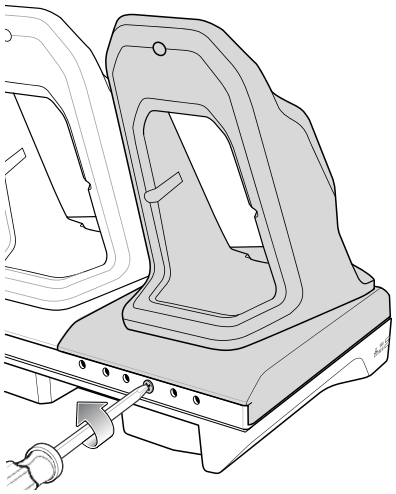

3. Slide the ethernet cup forward and lift.

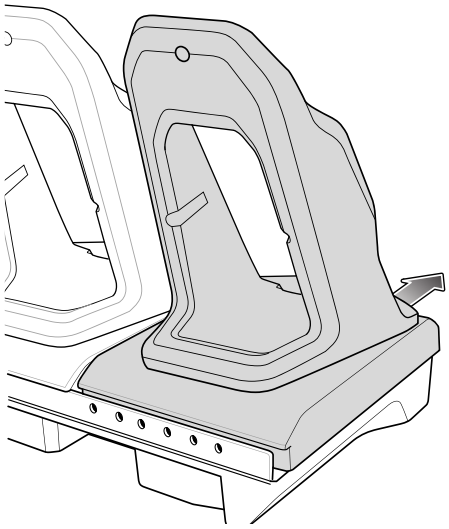

4. Disconnect the ethernet cup cables from the connectors.

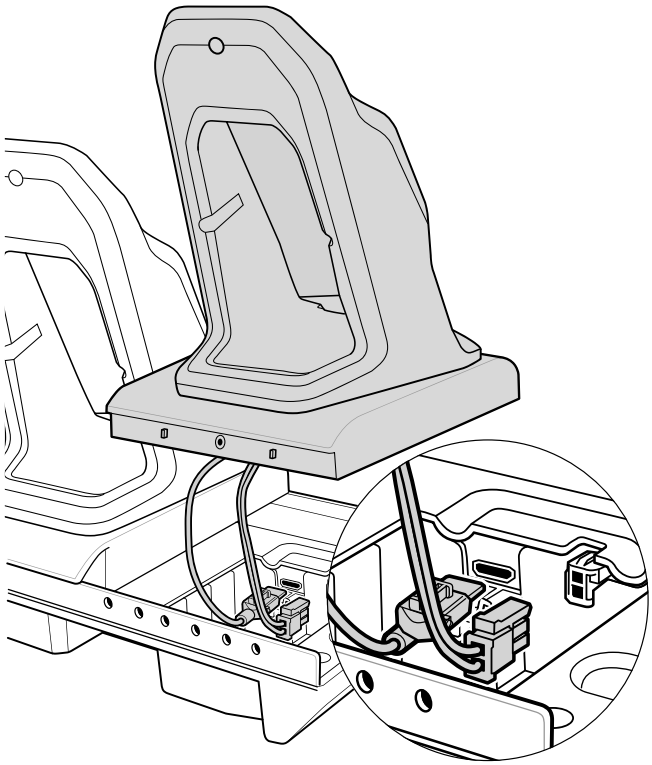

5. Connect the new ethernet cup cables to the connectors.

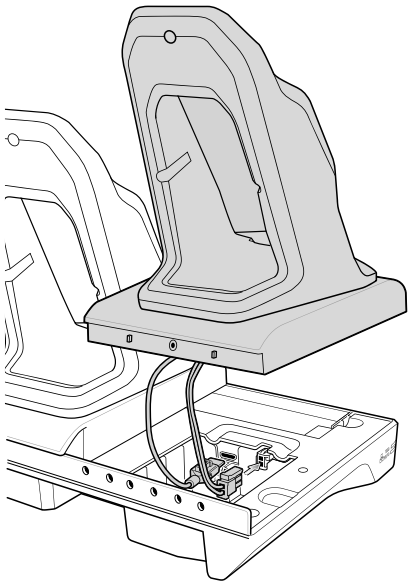

ZEBRA and the stylized Zebra head are trademarks of Zebra Technologies Corp., registered in many jurisdictions worldwide. All other trademarks are the property of their respective owners. © 2022 Zebra Technologies Corp. and/or its affiliates. All rights reserved. | zebra.com

MN-004468-01EN Rev. A 3/2022

6. Align the new ethernet cup with the cradle and slide the ethernet cup back.

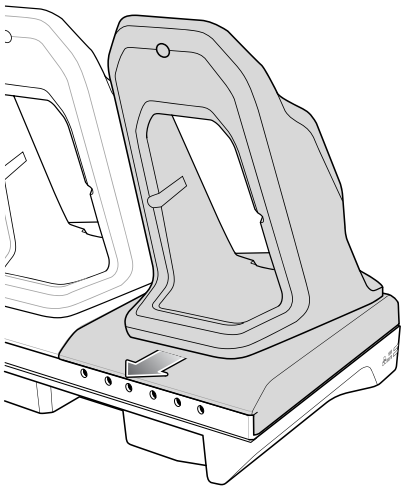
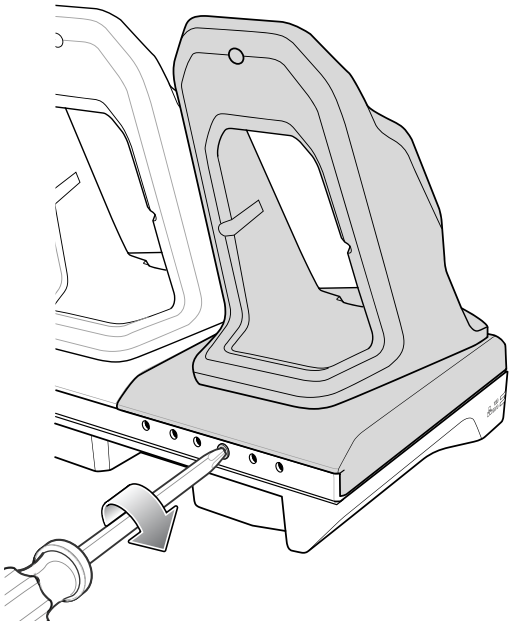
7. Using a Phillips screwdriver, secure the new ethernet cup to cradle with screw.